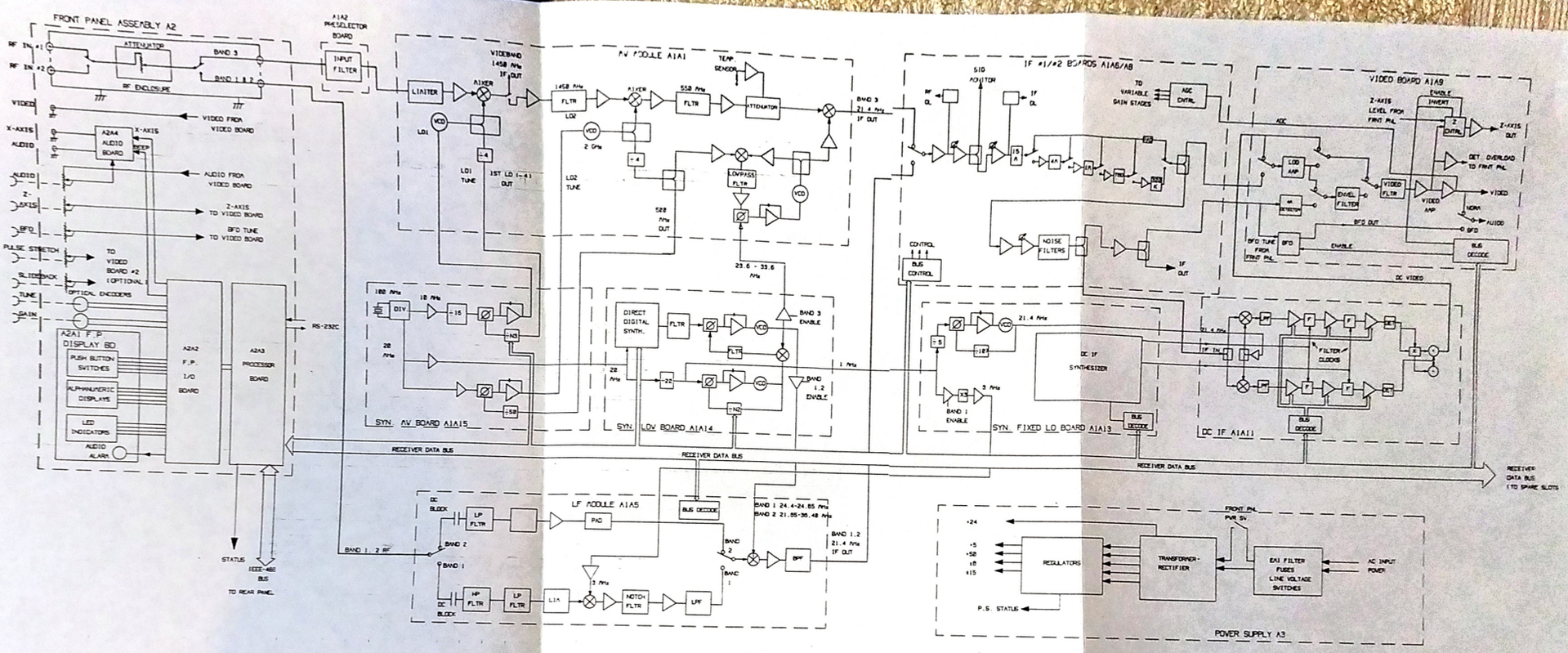

R110 RECEIVER BLOCK DIAGRAM
2/15/90

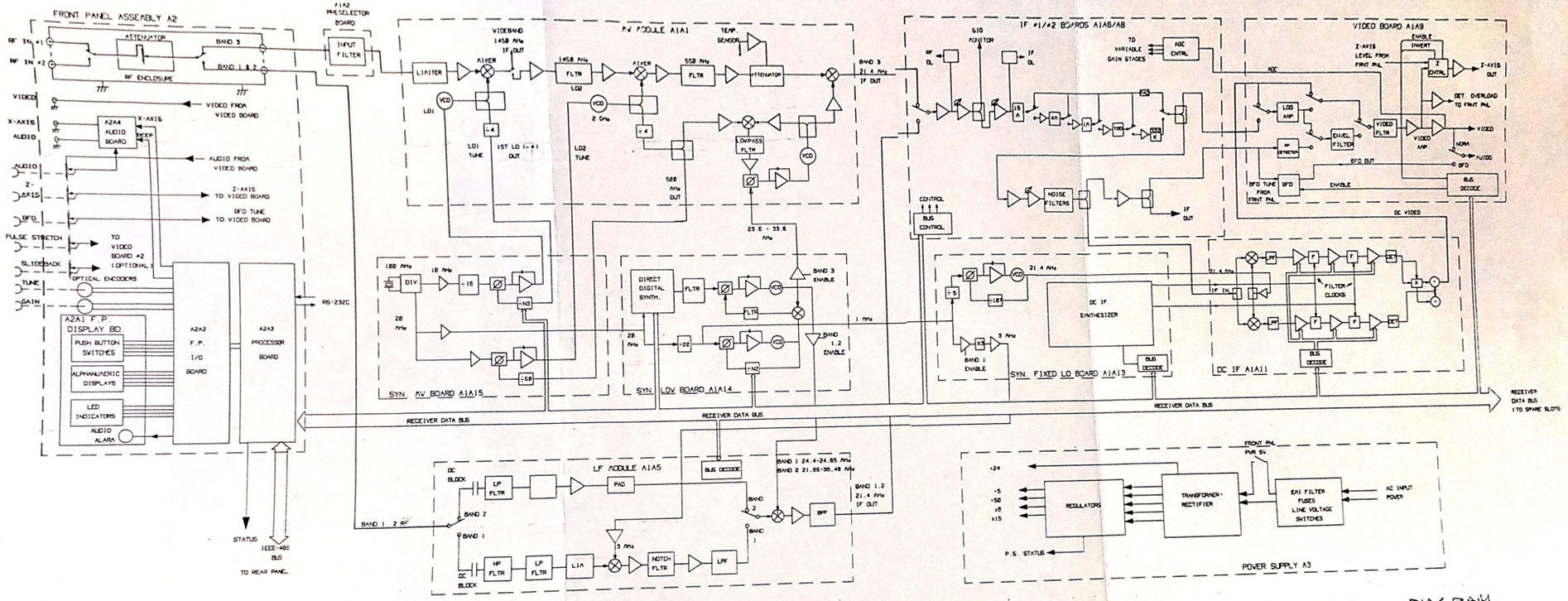

R110 RECEIVER BLOCK DIAGRAM
2/15/90