Service documentation

Receiver type series EKD 500

EKD 511/type 1340.42 A1

EKD 512/type 1340.42 A2

Volume 1

To go with this:
Service documentation 1340.042-91700 Su 02, Vol. 2

We reserve the right to make modifications to the construction and design which serve the improvement and development of our equipment without prior notice.

Order-No. of the Service documentation 1340.042-91700 Su 02
Edition 2/1989
Volume 1

Contents

		Page
1.	General remarks	5
2.	Test equipment and auxiliary testing means	7
3.	Hints for dismounting and mounting	9
4.	Hints for troubleshooting	11
5.	Localization of the faulty subassembly and reestablishment of the functionability of the receiver by subassembly exchange	15
5.1.	Check "power supply section"	17
5.2.	Check "control unit"	18
5.3.	Check "frequency processing"	21
5.4.	Check "signal path"	23
6.	Repair of the faulty subassembly	26
6.1.	Power supply section 1340.039-01500	27
6.1.1.	Input and output values	27
6.1.2.	Measuring values within the power supply section	28
6.1.3.	Troubleshooting table	30
6.2.	Control unit 1340.041-01401	34
6.2.1.	Function principle	34
6.2.2.	Test and check arrangements	37
6.2.3.	Repair sequence "local operation"	38
6.2.4.	Repair sequence operation "external"	39
6.2.5.	Control computer	40
6.2.6.	Input-output logic	42
6.2.7.	Keyboard	44
6.2.8.	Digital display	47
6.2.9.	Register and interface	48
6.3.	Frequency processing	55
6.3.1.	Troubleshooting sequence	55
6.3.2.	Frequency processing - outline	56
6.3.3.	Phase-lock loop 1 (PLL1)	58
6.3.4.	Oscillator 1	60
6.3.5.	Frequency divider 1	64
6.3.6.	Oscillator 3 (PLL3)	66

Contents

			Page
6.3.7.	Phase-lock loop 2 (PLL2)		70
6.3.8.	Oscillator 2		72
6.3.9.	Frequency divider 2		76
6.4.	Signal path		78
6.4.1.	Check or correction of levelling		78
6.4.1.1.	Basic amplification "signal path 1"		78
6.4.1.2.	Control volume "signal path 1"		78
6.4.1.3.	Mixer - symmetry		78
6.4.1.4.	Basic amplification "signal path 1 and 2"		79
6.4.1.5.	Levelling "A3E"		79
6.4.1.6.	Changing AF line levels (max +6 dBm)		79
6.4.1.7.	Balancing "control synchronism/channel A and B, manual control		79
6.4.1.8.	Balancing "automatic control/channel A and B"		80
6.4.1.9.	Check "control synchronism/channel A and B, automatic control		80
6.4.1.10.	Adjustment "control start/control element 1" (mixer 1)		80
6.4.1.11.	Adjustment "trigger - control amplifier"		80
6.4.1.12.	Adjustment "short-time detector"		81
6.4.1.13.	Balancing "display E "		81
6.4.2.	Signal path 1,	1340.041-01311 or -01312	82
6.4.2.1.	Preselector 1,	1340.041-01351	83
	Preselector 2,	1340.041-01352	
6.4.2.2.	Mixer 1,	1340.041-01353	87
	Mixer 2,	1340.041-01354	
6.4.3.	Signal path 2,	1340.041-01321 or -01322	88
6.4.3.1.	Carrier oscillator	1340.037-01355	90
6.4.3.2.	IF2/A,	1340.041-01357 or -01367	95
	IF2/B,	1340.041-01356 or -01366	
6.4.3.3.	Demodulator and AF section,	1340.039-01358	96
6.5.	F1B-demodulator,	1340.041-01258	98
6.5.1.	Check "input signal"		98
6.5.2.	Check "input band-pass"		98
6.5.3.	Check "limiter amplifier"		98

Contents

		Page
6.4.5.	Check "PLL"	98
6.5.5.	Check "changeover switch for low passes 100/600 Bd"	99
6.5.6.	Check "amplifier"	99
6.5.7.	Check "evaluator circuit"	99
6.5.8.	Check "line current for teleprinter"	99
6.5.9.	Check "holding and capture range of PLL"	99
7.	Measuring the main parameters	101
7.1.	Frequency accuracy	101
7.1.1.	Measuring and correcting with standard test conditions	101
7.1.2.	Check and correction on service conditions	101
7.2.	Sensitivity	103
7.3.	Amplification control	106
8.	Components selected by the manufacturer	109
	List of terms translated	110

1. General remarks

For carrying out repair work on receivers of series EKD 500, the following unit-specific documentation is required:

- Equipment documentation series EKD 500 1340.042-91700 Eu 02 (specification, operation, maintenance) forming part of every unit supply.
- Service documentation series EKD 500 1340.042-91700 Su 02
  Volume 1: Repair instructions
  Volume 2: Outline of subassemblies
  Functional diagram
  Circuit diagrams
  Complementation drawings

Attention!

When performing service work adhere to the safety instructions especially to those concerning

* earthing of the unit to be repaired
* work on open units

Repair work is only to be carried out by authorized and particularly instructed spedialists being well acquainted with the analogue and digital integrated circuit engineering as well as with the work of electronic units.

Any person meeting these demands will be able to repair every subassembly.

Reestablishment of troublefree functioning of the receiver can be performed through

* detecting and replacing the faulty subassembly (Section 5)
* repairing the faulty subassembly (Section 6)

In case of fault indication (F1 to F4) during ROM test (A5), the complete printed circuit "Control computer" (contained in spare part list E9) is to be replaced.

The spare part assortment offered by the manufacturer is to be taken from the spare part lists which are supplied on special request.

Spare part list E1: mechanical and electrical wear parts.

Spare part list E7: complete spare subassemblies (cassettes, control unit, power supply section)

Spare part list E9: stock spares for unit-specific spare parts

Capacitors, resistors, diodes, transistors, and integrated circuits required for repair work can also be procured from other manufacturers. It is to be observed that the electrical and mechanical values are equivalent. Component replacement on the double-clad pc boards requires utmost care when soldering on the plated-through holes.

If the requirements for subassembly repair are not met, it is recommended to exchange the entire subassemblies and have them repaired in a service workshop.

Performing repair work on the basis of this service documentation requires the test equipment and auxiliary testing means listed below. In the following, the abridged designation of the instruments is used; e.g. RF generator: P4.

P1 Counting frequency meter

f_e ≧ 120 MHz

$\Delta f/f$ ≦ $1 \cdot 10^{-7}$

U_e ≦ 50 mV

P2 RF-mV meter with RF measuring head and 50 ohm load

f = 10 kHz to 200 MHz

U_e = 3 mV to 10 V

P3 (2x) AF-mV meter

f = 5 Hz to 200 kHz

U_e = 15 mV to 5 V

R_e ≧ 100 kohm/V

P4 RF generator

f = 10 kHz to 30 MHz

R_i = 75 ohm

emf = 1 µV to 3 V

unmodulated/modulated

1000 Hz m = 0.3

P5 Double-beam oscilloscope

f_e ≧ 50 MHz

P6 Single-beam oscilloscope

f_E ≧ 10 MHz

P7 Wobble oscillator with display unit and probe

f = 100 kHz to 200 MHz

P8 Multimeter

R_i ≧ 100 kohm/V

P9 Digital voltmeter

U_e ≦ 30 V dc

P 10	Tone oscillator f = 300 Hz to 6000 Hz R_i ≤ 20 ohm U_a = 2 mV to 1 V	
P 11	Mains control transformer 0 to 250 V/6 A	
P 12	Line tester	
P 13	Test plug 'substitution - control unit' 1340.042-01602	Test cable set 1340.042-01601 (cf. equipment documentation 1340.042-01700 Eu 02 Section I 6)
P 14	Adapter cable 'input-output logic' 1340.042-01603	
P 15	Connection adapter 'control unit' 1340.042-01604	

RF cable (BNC-50 ohm) 2 pcs.	1340.037-01124	contained in the accessories 1340.037-10001 Z1 02 (4)
RF adapter	33 TGL 200-380	

3. Dismounting and mounting

Pull the mains plug before starting dismounting. Loosen the red-ring marked screws provided below the handle of the plug-in. Withdraw the plug-in out of the rack by pressing the laterally arranged latches inwards.

Attention! Place the plug-in directly next to the casing and separate the BNC plug of the aerial cable from the plug-in.

After pulling the mains plug, the electric connection between the plug-in and the casing can be reestablished by means of the 30-cor or 8-core adapter cable contained in the accessories.

Upon loosening the 8 screws marked with a red ring located on the right plug-in wall, the power supply section can be withdrawn upwards and connected again with the plug-in via the 16-core adapter cable contained in the accessories. An extractor, forming part of the accessories, (drwg.-No. 1340.037-02823) can be used for this purpose.

For cassette exchange, slacken per cassette 2 wing nuts provided on the rear wall of the plug-in and 2 hexagon screws (SW 8) on the front.

The front plate can be swung down by 90° thus providing access to the connections of all control elements as well as to the cassette terminals by only loosening the two screws located next to the plug-in handles.

For exchanging the "control unit" (with the front plate swung down by 90°), slacken both controls " " (13) and "changeover switch for LED row" (2) as well as the 4 fastening screws. After removing the two plug-and-socket connections X1022 and X1023 the subassembly can be lifted out.

The defective control elements

* regulator "volume" (4)
* regulator "RF/AF amplification" (6)
* regulator "A1/pitch" (5)
* changeover switch/monitoring channel (3)
* unit switch ON/OFF (1)

can only be replaced with the "control unit" taken out of the receiver.

Access to all components of the cassettes is provided after loosening the 4 wing screws, swivelling out the two outer cassettes and unscrewing the 4 inner lids (with the pressed-in fastening points).
When a pc board is to be exchanged, take the respective cassette out of the casing and unscrew both lids. On the soldering side, slacken the 4 hexagon nuts by means of a socket wrench (7 mm). On the complementation side, remove the probably existing connections to the adjacent circuit.
The pc board can be withdrawn to the rear.
For carrying out repair work on the inner side of the rear wall of the casing, loosen the 4 hexagon nuts of the rear wall and the earth connections provided on the right inner side of the casing. Then, the rear wall of the casing can be removed.

Mounting is carried out in the reverse order.

4. Hints on troubleshooting

In case of faulty operation, fault localization is necessary for aimed repair work.

The sequence is the following:

- External fault sources in the incoming and outgoing cables are to be excluded by checking.
- Exclude wrong operation of the receiver.
- If a total breakdown is present, check the fuse link in the receiver plug-in (equipment documentation EKD 500, section III.6.1.).
- Check the functionability of the receiver (equipment documentation EKD 500, Section III.5.).
- Reestablish the functionability of the receiver by:
  - detecting and replacing the faulty subassembly (Section 5 of this service documentation)
    Recondition: Spare subassembly according to the spare part list 1340.042-00001 E7
  - replacing the faulty component (fault detection acc. to Section 6 of this service documentation)
- Marking of subassemblies:
  All subassemblies are marked - in addition to the drwg.-No. - (referred to the electric components) with two-digit numbers. (viz. subassembly survey 1340.042-00001 U 02 (3)
- Marking of components:
  All components are marked with four- (five)- digit numbers. The two first digits correspond with the code number of the subassembly.
  Example: V04 in the circuit diagram 'mixer 1' ≙ V3304
  L01 in the circuit diagram 'oscillator 2' ≙ L2501

When ordering spare parts, these four-(five)- digit numbers are to be indicated.

- Marking of subassemblies in printed circuits:

Code No.	Subassembly/printed circuit	Drwg.-No.	
00	Casing	1340.042-01001	
	DC filter	1340.042-01022	
10	Plug-in	1340.041-00001	
20	Frequency processing *)	1340.041-01211	
21	Oscillator 1	1340.037-01251	
22	Frequency divider 1	1340.037-01252	
23	Oscillator 3	1340.039-01253	
205	Frequency processing *)	1340.041-01221	
24	Reference frequency	1340.037-01254	
25	Oscillator 2	1340.037-01255	
26	Frequency divider 2	1340.037-01256	
28	F1 demodulator	1340.041-01258	
30	Signal path 1 *)	1340.041-01311	(EKD 511)
		1340.041-01312	(EKD 512)
31	Preselector 1	1340.037-01351	
32	Preselector 2	1340.041-01352	
33	Mixer 1	1340.041-01353	
34	Mixer 2	1340.041-01354	
305	Signal path 2 *)	1340.041-01321	(EKD 511)
		1340.041-01322	(EKD 512)
35	Carrier oscillator	1340.037-01355	
36	IF2/B	1340.041-01356	(EKD 511)
		1340.041-01366	(EKD 512)
37	IF2/A	1340.041-01357	(EKD 511)
		1340.041-01367	(EKD 512)
38	Demodulator and AF section	1340.039-01358	
40	Control unit *)	1340.041-01401	
41	Diode board	1340.041-01451	
42	Transistor board	1340.041-01452	
43	Input-output logic	1340.041-01453	
44	Control computer	1340.041-01454	
45	Register and interface	1340.041-01455	
46	Display	1340.041-01456	
47	Keyboard, complete	1340.041-01402	
50	Power supply section *)	1340.039-01500	
51	Transverter	1340.039-01551	

*) Spare subassemblies according to spare part list E7

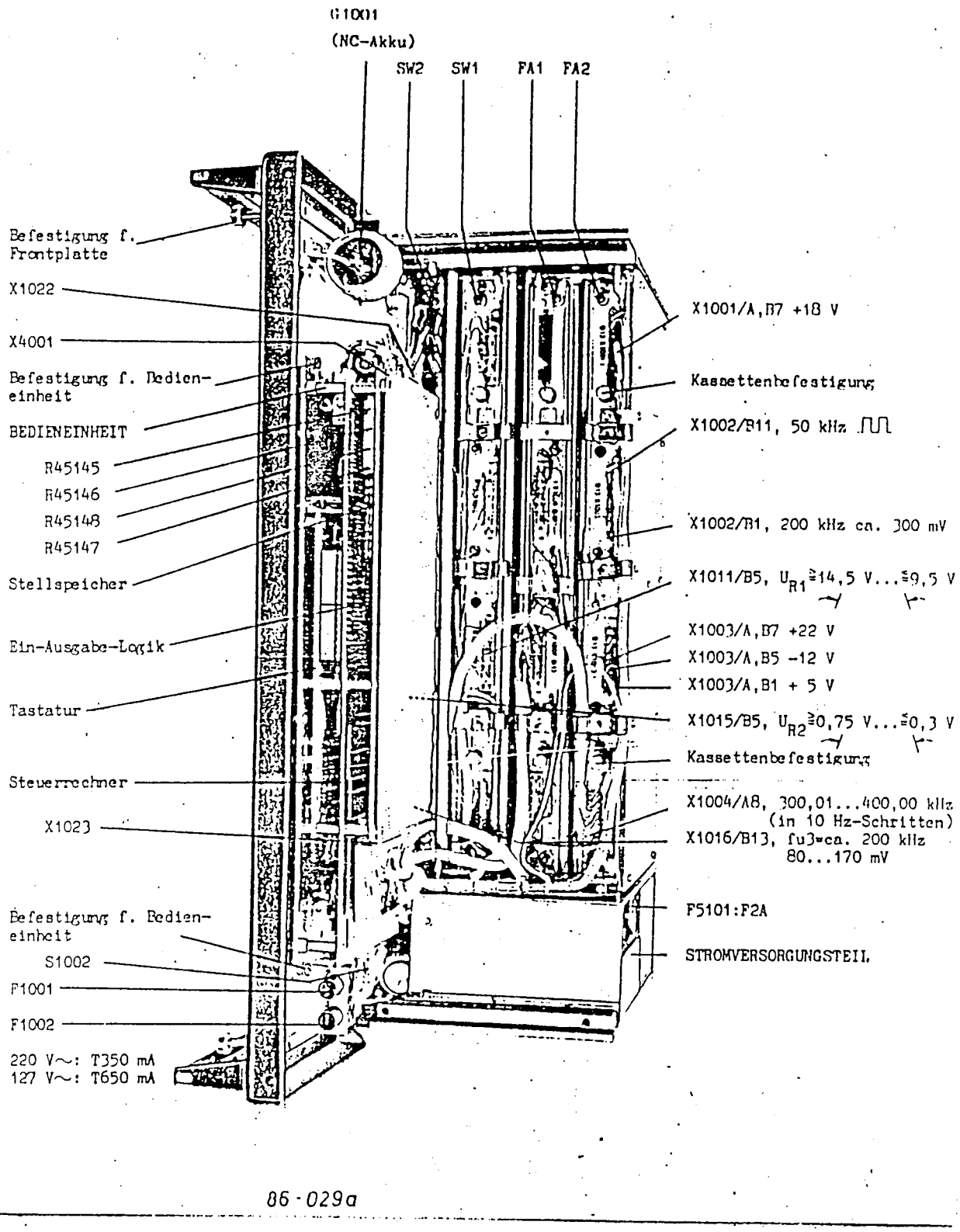

Figure 1

Plug-in with the front plate swung down

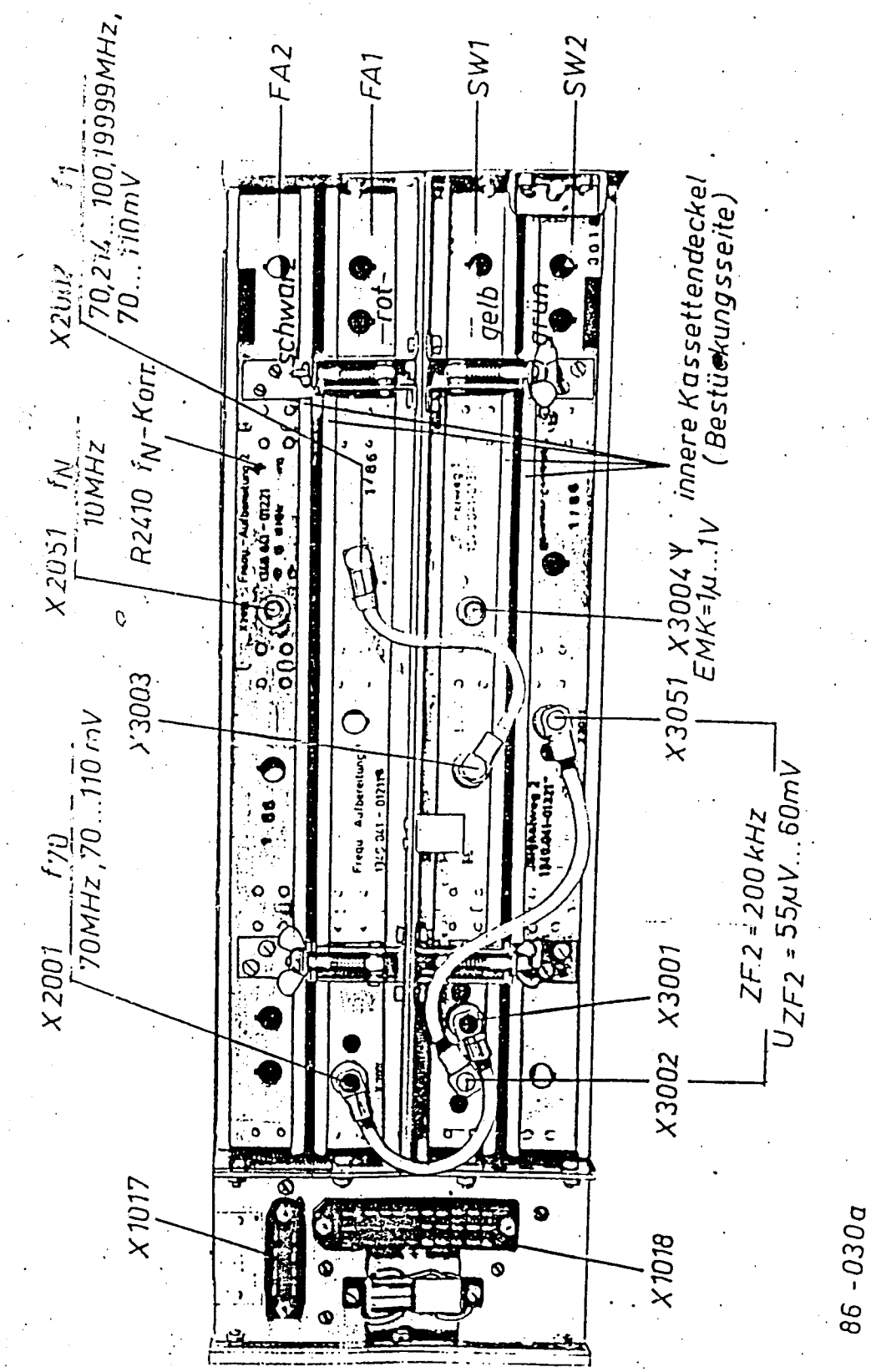

Figure 2

Plug-in - Rear view

Localization of the faulty subassembly and reestablishment of the functionability of the receiver by subassembly exchange

To make service work easier and to reduce the outage times of the receiver, we recommend to replace entire subassemblies. For this purpose, the manufacturer of the equipment offers spare subassemblies according to the spare part list E7.

Variant Spare subassembly	EKD 511 1340.042-01871 E7	EKD 512 1340.042-01872 E7
Frequency processing 1	1340.041-01211	1340.041-01211
Frequency processing 2	1340.041-01221	1340.041-01221
Signal path 1	1340.041-01311	1340.041-01312
Signal path 2	1340.041-01321	1340.041-01322
Control unit	1340.041-01401	1340.041-01401
Power supply section	1340.039-01500	1340.039-01500

Attention!

The cassettes of receiver EKD 500 and of EKD 300 are not interchangeable.

The Power supply sections of receiver EKD 500 and EKD 300 can be exchanged with each other.

Subassembly exchange requires no readjustment for the functionability of the receiver.

Sections 6.1. to 6.5. contain hints on readjustment in order to minimize tolerances.

In case that the fault symptoms detected during functional check (carried out in accordance with Section III/5) did not result in localization of the faulty subassembly, checks on the receiver plug-in outside the casing are necessary.

- Attention! Pull mains plug before taking the plug-in out of the casing.
- Establish electric connections between casing and plug-in via the 30-core adapter cable (contained in the accessories). For checks via interfaces EXT and EXP, connect additionally the 8-core adapter cable.
- Dismounting and mounting according to Section 3.
- For all checks mentioned in Section 5 opening the cassette lids is not necessary.

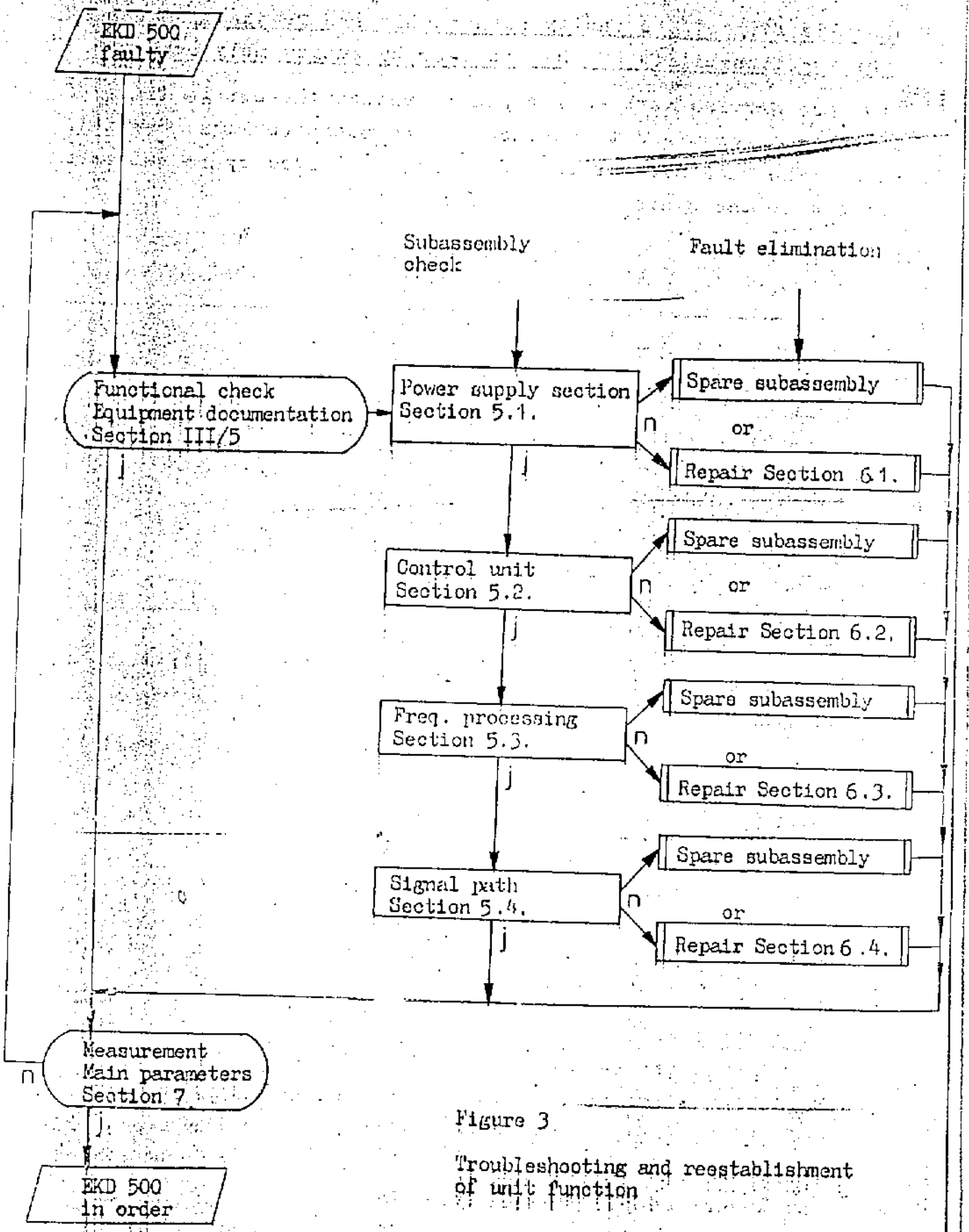

Figure 3

Troubleshooting and reestablishment of unit function

The undermentioned remarks serve to detect the faulty subassembly with only a few test means.

5.1. Check 'power supply section'

5.1.1. Measuring of the output voltages with digital voltmeter (P9)

	Test point	Correction with
+18 V ± 0.2 V	X1001/A7, B7	R 5213
+ 5 V ± 0.1 V	X1003/A1, B1	R 5217
+22 V ± 2 V	X1003/A7, B7	–
−12 V ± 0.1 V	X1003/A5, B5	R 5114

5.1.2. In case of voltage breakdowns

+18 V, +5 V, +22V, −12 V: F 1001 and F 1002
+18 V, +5 V, +22V: F 5101
For battery operation: battery cable fuse

} to be checked

For localizing short-circuits in the subassemblies, the cassettes are to be withdrawn one after the other.

5.1.3. In case of faulty power supply section

→ replacement by spare part subassembly
(Pay attention to the correct voltage adjustment (X 5002) or
→ repair according to Section 6.1.

5.2. Check 'control unit'

5.2.1. When the functional check of the receiver (equipment documentation Section III/5) proved the control unit being faulty

- fault recognizion by control test A1 to A5
- no correspondence between operation and display

the following has to be carried out:

→ replacement by spare subassembly
(required readjustment: tolerance minimization for receiving level display;
balance R 45145, R 45146, R 45148, R 45147
according to Section 6.2.) or

→ repair in accordance with Section 6.2.

5.2.2. Functional breakdown of the receiver although operation and display correspond with each other

- Possible fault reasons:
  - Register and interface - output faulty
  - Frequency processing faulty
  - Signal path faulty
- Fault delimitation by substitution of the control unit by test plug pair P 13
  (Drwg.-No. 1340.042-01602)

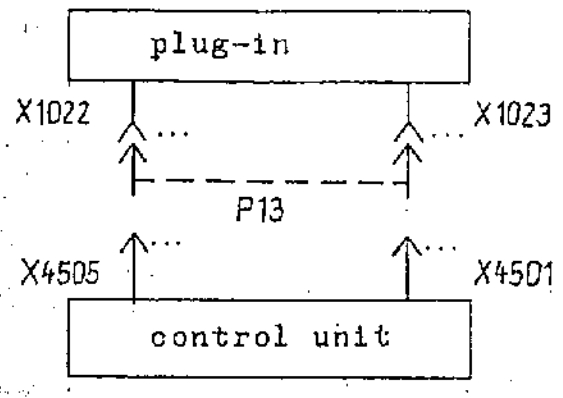

- The test result supplies other hints on possible fault sources: 'control unit'
  'frequency processing1' and '2'
  ' signal path 1' and '2'

Unscrew front plate fastening and swing front plate down by 90°.

Separate terminal sockets X 1022 and X 1023 from the control unit and connect them with test plug pair P 13.

Changeover switch at P 13 to position ↑
according to EKD adjustment ..... 13 E 0.00 GC 1, SEL 0

i.e.: PLL2: f2/100 = 400 kHz
PLL3: f3 = 69.6 MHz
± f70

If: A1 tone audible in the loudspeaker, at the IF output (X 0003): 200.000 kHz (measure with P1),

Then: frequency processing 1:
frequency processing 2:
signal path 1(from mixer 1):
signal path 2:
} troublefree

register and interface output: faulty
(incl. connection cables)

→ Replace control unit by spare subassembly (required readjustment: tolerance minimization for receive level display according to Section 6.2.)

→ or repair in accordance with Section 6.2.

Changeover switch at P 13 to position ↓
according to EKD adjustment 13 E 9999.99 GC 1, SEL 0

i.e. PLL2: f2/100 = 300.01 kHz
PLL3: f3 = 69.69999 MHz
±Δ f70

Connect X 2051 (f_N = 10 MHz) with receiver input (X 0001) by means of RF cable 1340.037-01124 (in the accessories).

If: A1 tone audible in the loudspeaker, at the IF output (X 0003): 199.99 kHz (measure with P1),

Then: frequency processing 1:
frequency processing 2:
signal path 1:
signal path 2:
} troublefree

register and interface output: faulty
(incl. connection cables)

→ Replace control unit by spare subassembly
(required readjustment: receive level display
according to Section 6.2.)

→ or repair in accordance with Section 6.2.

5.3. Check 'frequency processing'

5.3.1. Cassette 'frequency processing 2'

- f2/100 to X 1004/A 8 (frequency divider 2)
  - . Check of frequency (with P1) and voltage (with P6)

f_E input (kHz)	f2/100 (kHz)	$u_{f2/100}$ (V_{ss})
0.00	400.00	⎍ ≥1.5
99.99	300.01	

  - . Potential conversion of all logic conditions for 'frequency divider 2' drive.

f_E input (kHz)	f2/100 (kHz)
77.77	322.23
88.88	311.12

- 200 kHz at X 1002/B 11 (reference frequency)
  check of frequency: 200.000 kHz (with P1)
  and voltage: 150 mV to 300 mV (with P2)
- 50 kHz at X 1002/B 1 (reference frequency)
  check of frequency: 50.000 kHz (with P1)
  and voltage: ⎍ ≥2.4 V_{ss} (with P6)
- In case of faulty 'frequency processing 2':
  → replacement by spare subassembly
  → or repair in accordance with Section 6.3.

5.3.2. Cassette 'frequency processing 1'

- f1 to X 2002 (rear of the plug-in)
  - . Check of frequency (with P1) and voltage (with P2) for the subranges of oscillator 1

Range of osc. 1	f_E input (kHz)	f1 (kHz)	admissible fault Δf (Hz)	u_{f1} across 50 ohm (mV)
1a	0.00 1999.00	70200.00 72199.00	≙ ± 150 *)	80 ... 100
1b	2000.00 9999.00	72200.00 80199.00		
2	10000.00 29999.00	80200.00 100199.00		

Check of f1 with potential conversion of all logic conditions for the drive of 'frequency divider 1'

f_E input (kHz)	f1 (kHz)	admissible fault Δ f1 (Hz)
17700.00	87900.00	$\leqq \pm$ 150 *)
28800.00	99000.00	

* Δ f1 = Δ f70 $\leqq$ 150 Hz

Δ f70 is eliminated with the 2nd frequency conversion (mixer 2)

- f 70 to X 2001 (rear of the plug-in)
  Check of frequency (with P1) and voltage (with P2)

f70	70 MHz $\pm$ $\leqq$ 150 Hz
u_{f70}	80 mV to 100 mV

- In case of faulty 'frequency processing 1':
  → replacement by spare subassembly
  → or repair in accordance with Section 6.3.

Precondition: 'power supply section'
'control unit'
'frequency processing' } troublefree

5.4.1. Check 'signal path 2' with 200 kHz from 'frequency processing 2'

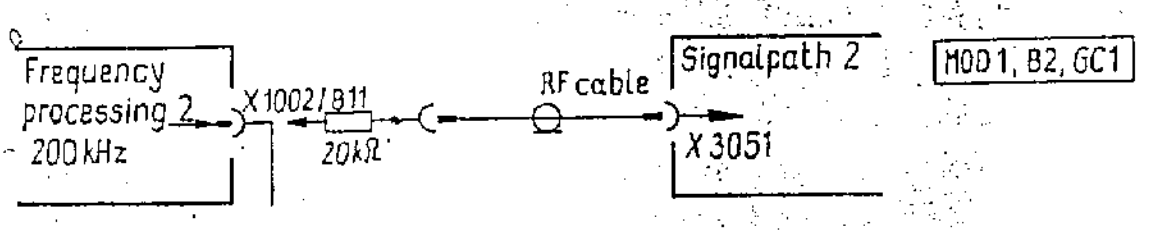

- 'signal path 2' in order: E_γ display . LED row: 80 to 100 dB (µV)
  . digital: 42 ... 52

  A1 tone available

- 'signal path 2' faulty:
  - → replace it by spare subassembly
    (readjustment: tolerance minimization for E_γ display according to Section 6.2.)
  - → or repair in accordance with Section 6.4.

5.4.2. Check 'signal path 1' and '2' with 200 kHz from 'frequency processing 2'

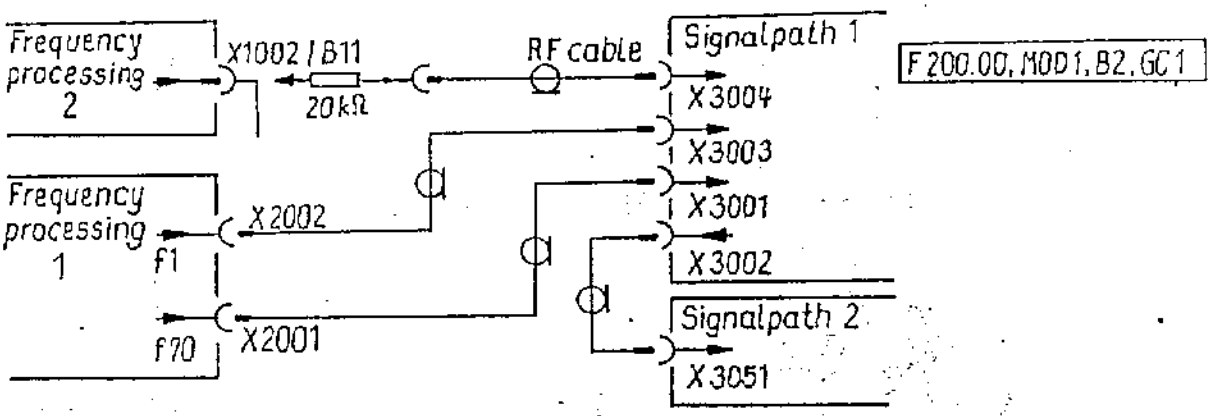

- 'signal path 1' and '2' in order:
  E_γ display: . LED row: approx. 60 dB (µV)
  . digital: 28 ... 35

  A1 tone available

- 'signal path 1' faulty:
  → replacement by spare subassembly
  (readjustment: tolerance minimization for E_Y display according to Section 6.2.)
  → or repair in accordance with Section 6.4.

5.4.3. Check 'signal path 1 - subsections'

5.4.3.1. Mixer 2 → X 3002 → signal path 2

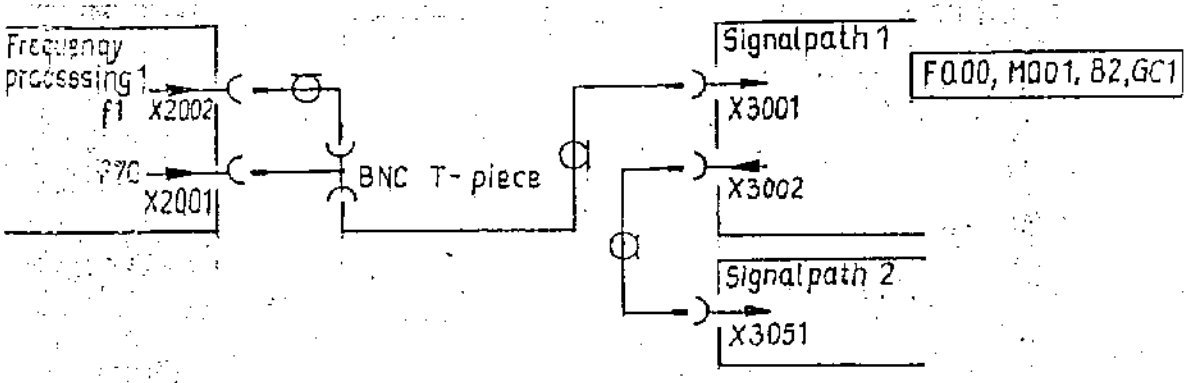

- Signal path 1 - subsections in order:
  E_Y display . LED row: 80 ... 90 dB (µV)
  . digital: 38 ... 45
  A1 tone available

- Signal path 1 - subsections f70 ampl. → mixer 2 → X 3002: faulty
  → replace signal path 1 by spare subassembly
  (readjustment: tolerance minimization for E_Y display according to 6.2.)
  → or repair in accordance with Section 6.4.

5.4.3.2. Mixer → IF-1 ampl. → Mixer 2 → X 3002 → signal path 2

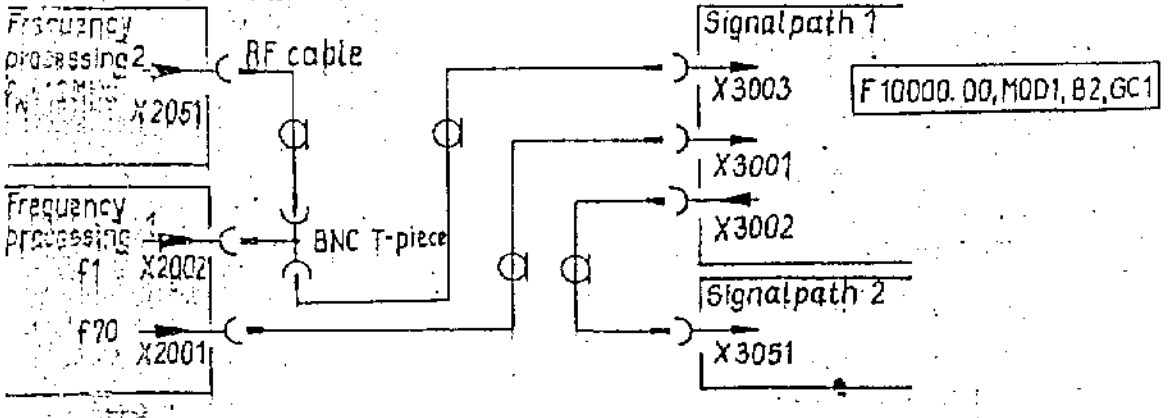

- Signal path 1 - subsection in order:

  E_φ display . LED row: approx. 90 dB (μV)

  . digital: 42 ... 48

  A1 tone available

- Signal path 1 - subsection: f1 ampl. → mixer 1 → OF1 ampl → 70.2 MHz crystal filter: faulty

  → replace signal path 1 by spare subassembly (readjustment: tolerance minimization for E_φ display according to Section 6.2.)

  → or repair in accordance with Section 6.4.

5.4.3.3. Preselector 1 and 2 → control element 1 → mixer 1 → IF1 ampl. → mixer 2 → X 3002 → signal path 2

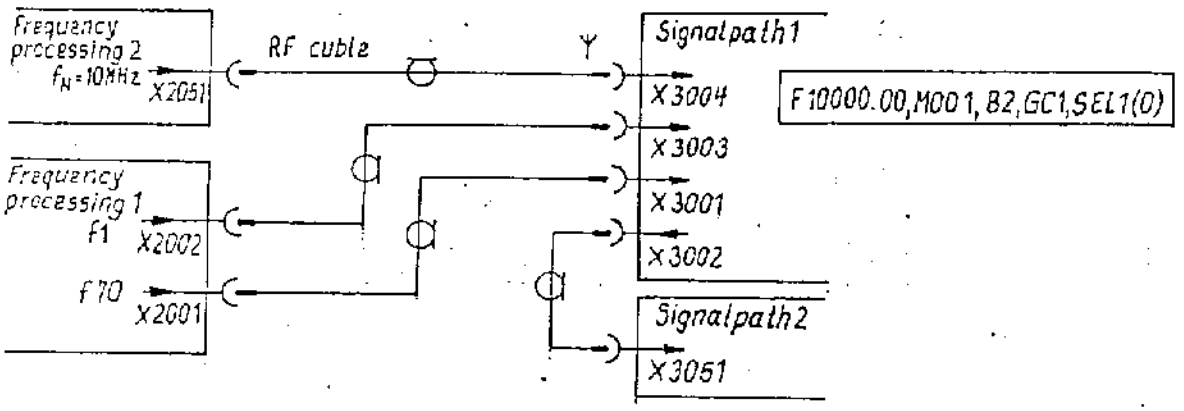

- Signal path 1 in order:

  E_φ display . LED row: approx. 100 dB (μV)

  . digital: 47 ... 53

  A1 tone available

- Signal path 1 - subsection:

  X 3004 → preselector 1 and 2 → control element → → ZP = 30 MHz: faulty

  → Replace signal path 1 by spare subassembly (readjustment: tolerance minimization for E_φ display according to 6.2.)

  → or repair in accordance with Section 6.4.

6. Repair of the faulty subassembly

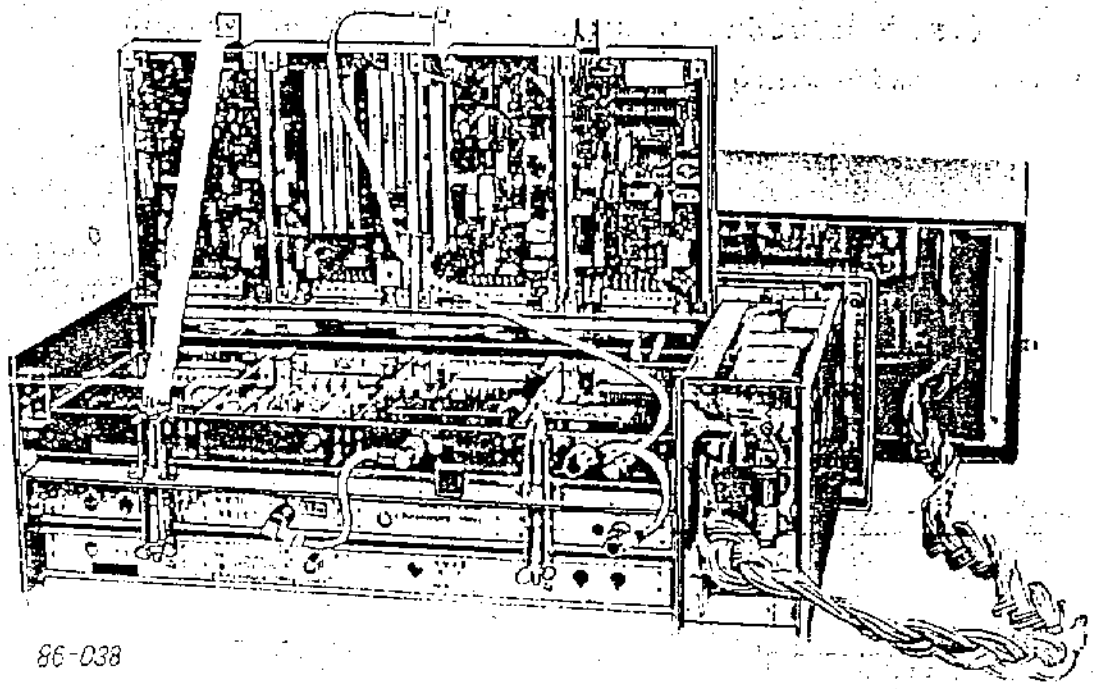

Figure 4

Service work on the cassettes of the signal path (SW1 and SW2) or on the cassettes of the frequency processing (FA1 and FA2)

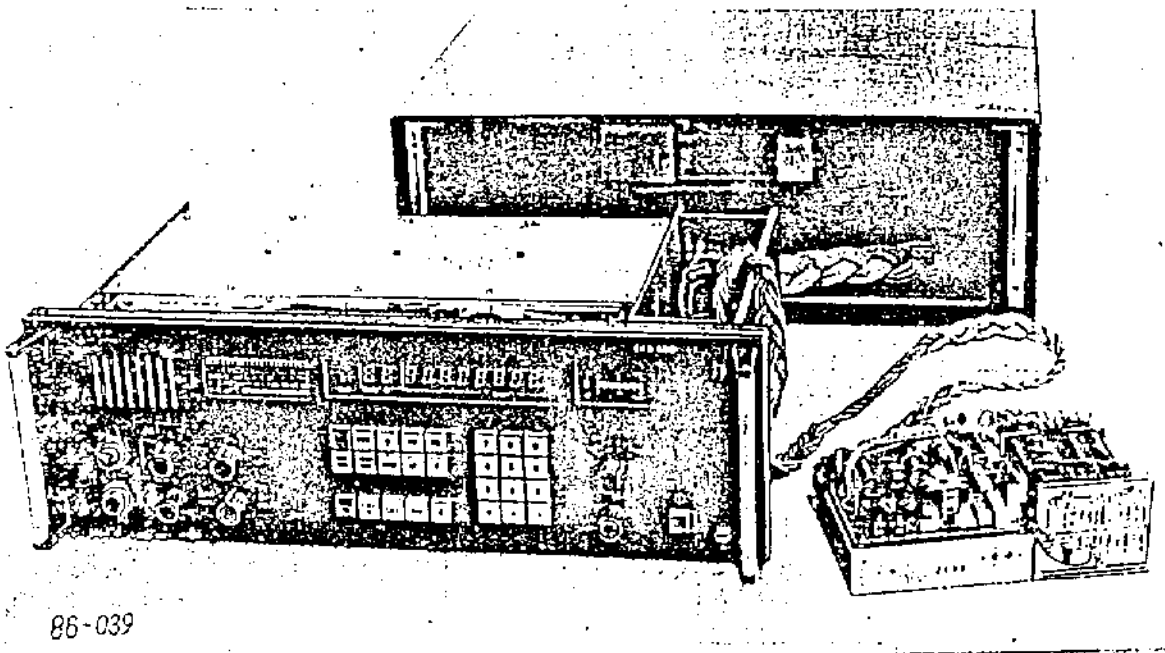

Figure 5

Unit arrangement for service work on the power supply section

6.1. Power supply section 1340.039-01500

6.1.1. Input and output values

EKD: f_E = 2.00 kHz

B_R8E, channel A

medium volume, $I_{\sqcap}$ = 40 mA

Power consumption of the entire unit

Current measurements with P8 at U_{rated} in the mains- or battery lead.

All indicated current values are approximate ones.

Mains operation:	~ 127 V ac	:	approx. 400 mA
	~ 220 V ac	:	approx. 230 mA
Battery operation:	⎓ 24 V dc	:	approx. 1.5 A
	⎓ 12 V dc	:	approx. 3.0 A

Output voltages

For measuring or correction:

Operate the plug-in outside the casing via the 30-core adapter cable (accessories).

Measurement with P6 at the measuring points according to Figure 1

+18 V	:	at X1001/A7, B7
+22 V	:	at X1003/A7, B7
-12 V	:	at X1003/A5, B5
+5 V	:	at X1004/A1, A2

Fine corrections only after an operating time of the receiver of = 30 min.

+18 V	±	100 mV	correction with R 5213	(I = approx. 650 mA)
+5 V	±	20 mV	correction with R 5217	(I = approx. 1.2 A)
-12 V	±	50 mV	correction with R 5114	(I = approx. 250 mA)
+22 V	-	2 V	-	(I = approx. 70 mA)

Check current load before every correction.

Hum voltages of the output voltages

The ripple is to be measured with load and 220 V ac input voltage by means of P6 (peak-to-peak value).

+18 V path	:	≤ 30 mV	(20 kHz)
+5 V path	:	≤ 50 mV	(20 kHz)
-12 V path	:	≤ 20 mV	(100 Hz or noise)
+22 V path	:	≤ 50 mV	(20 kHz +100 Hz)

Control behaviour

With change of the input voltage by ±10 %, the variations of the individual output voltages - measured with P9, amount to:

+18 V path	:	ΔU	= 60 mV
+5 V path	:	ΔU	= 20 mV
-12 V path	:	ΔU	= 10 mV

The input voltage variation is to be simulated with the adjustable transformer (P 12).

6.1.2. Measuring values within the power supply divider

measured with mains operation 220 V and load

Rectifier voltages

+18/+5 V path

(measured at C 5003) : approx. 30 V

-12 V path

(measured at C 5105) : approx. 20 V

Additional voltage for 22 V path

(measured at C 5108) : approx. 4 V

Overcurrent limitation

The +18 V-, +5 V-, and -12 V path are provided each with a permanently adjusted current limitation.
This current limitation is to be checked by an additional load (slide resistor (R1) 100 → 0 ohm).

Fault	Sweep current	s-c current
+18 V path	approx. 2 A	≡ 2.5 A
+5 V path	approx. 3 A	≡ 4 A
-12 V path	approx. 0.4 A	≡ 0.25 A

Shorting the +18 V- and +5 V paths causes switching controller noises in the audible range.

Curve shape

At the test points P01 to P06 indicated in the circuit diagram the prescribed curve shapes shall be detected with P6.

Working frequency

The transverter operates at rated voltage with a frequency of roughly 80 Hz.
It greatly depends on the input voltage.
The switching controller is to be adjusted to 20 kHz ± 3 kHz by means of R 5227.

Closing behaviour

The unit-specific time sequence of the partial voltages in case of ON and OFF switching is the precondition for the functionability of the control unit.

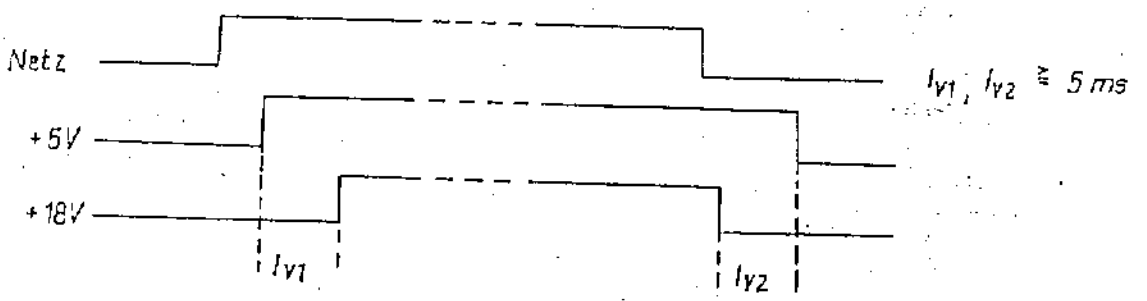

t_{V1}, t_{V2} = delay time of ON and OFF switching

When t_{V1}, t_{V2} is not kept, the power supply needs repair.

6.1.3. Troubleshooting table

Fault	Possible fault reason	Fault elimination
a) Transverter does not start to oscillate	- False voltage protection responds	- viz. b)
	- V5101, V5102 faulty	- Replace V5101, V5102
	- Contact troubles at K5001/5002	- Replace K5001, K5002
	- Contact troubles at circuit closer on front plate	- viz. c)
	- Overload at secondary end	- causes increased power consumption with mains operation
b) False voltage protection responds	- Battery voltage does not comply with the voltage adjusted on the terminal board X 5002.	
	- Component in the protective circuit faulty	- e.g. V 5107, V 5106, V 5103, K 5101
c) Starting aid for oscillation not excitated (C 5101 not charged or not discharged with connection or disconnection)	- Interruption in the oscillation-start circuit X 5001/b3(+)- k 02/7/5/11/13- R 5111-V 5110- circuit closer (on front plate)	

Fault	Possible fault reason	Fault elimination
d) F 5101 responds	- Overvoltage in the +5 V- or +18 V path	- Disconnect load in the unit (e.g. TTL circuits) - dissolder connections 6 and 7 on pc board 51 - check if an exceeding voltage presents at the output of one of the two paths. In this case e.g. transistor V 5101 or V 5102 or the control (MAA 723) is faulty.
	- Short in the circuit	- Separate load and check if the fuses keep responding. In this case e.g. V 5212, V 5214 or transistor insulation faulty.
	- Overvoltage protection circuit faulty	- e.g. V 5107, V 5108 or V 5109 (thyristor)
e) Noise caused by switching controller	- Sawtooth generator (V 5210, V 5207) faulty	- Check curve shapes at P 01, P 02. Trace signal up to circuit connection 3

Fault	Possible fault reason	Fault elimination
5.) Output voltage of the -12 V-path too high	- V 5001 faulty - N 5101 faulty	
6.) Frequency of rectifier hum voltage amounts, with mains oper., to 50 Hz instead of 100 Hz	- One rectifier branch of the respective rectifier faulty	- Measurement at C 5105: -12-V path C 5108: Additional voltage for 22-V path C 5003: +5-V path +18-V path

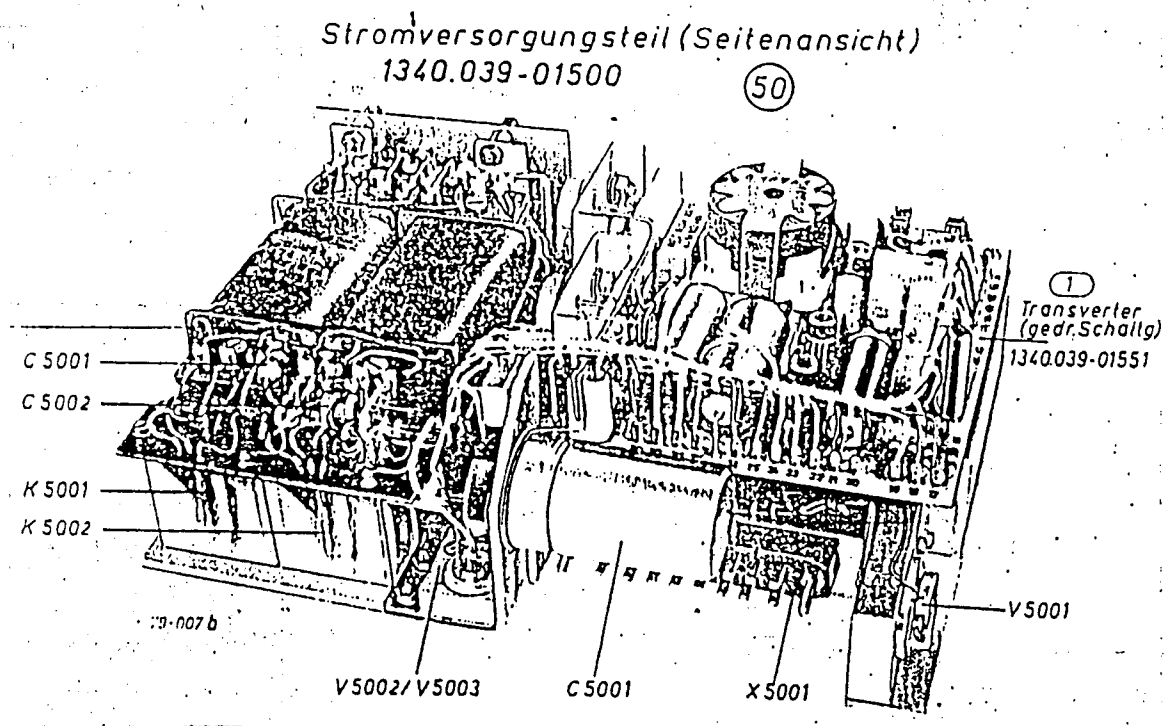

Figure 6

Power supply section 1340.039-01500

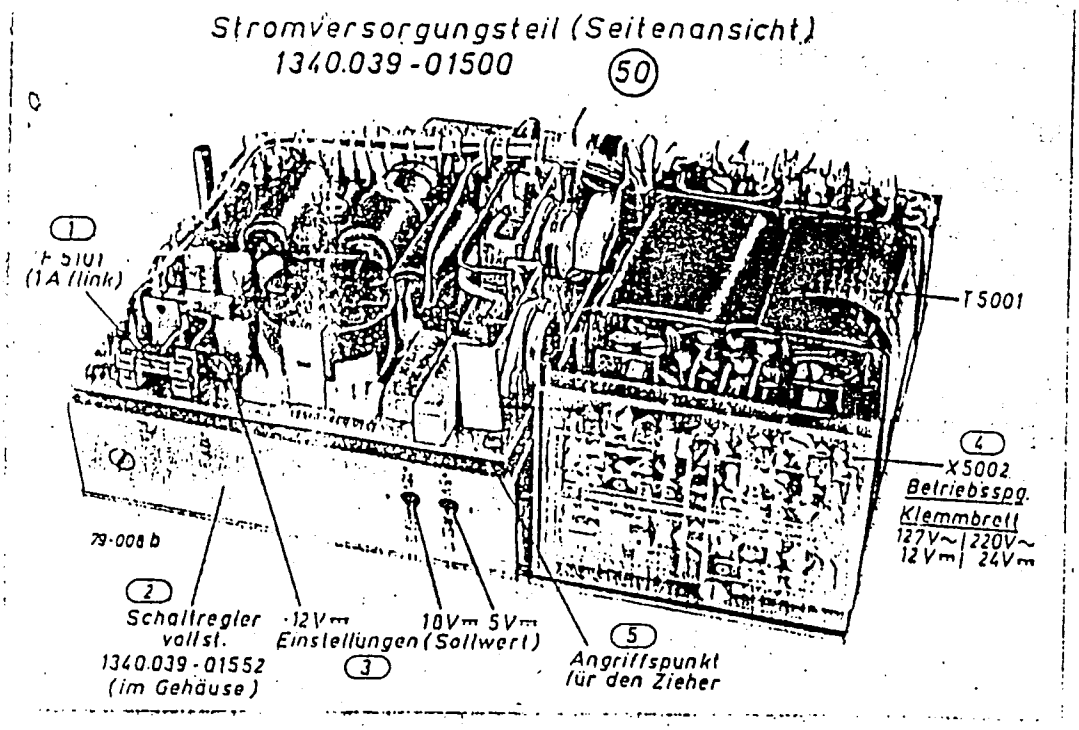

Figure 7

Power supply section 1340.039-01500

6.2. Control unit

6.2.1. Function principle

After switching on the unit as well as after mains fai the microcomputer is brought in the initial position and the receiver is adjusted to its codition before the disconnection or mains failure.
Subsequently, a program for multiplexer control of the display is initiated.
All operating measurements carried out via keyboard or 24-V in face cause via port A an interruption of the PIO circuit.
Mains failure and test routines are controlled via the non-mas interrupt input of CPU. The RAM circuits of the control comput are backed by an internal battery.
In case of a total breakdown, it is recommended to start troub shooting in the computer core because fault detecting is suppo by the software. The following sequence is to be adhered to: Control computer - input-output logic - keyboard - display - register and interface.

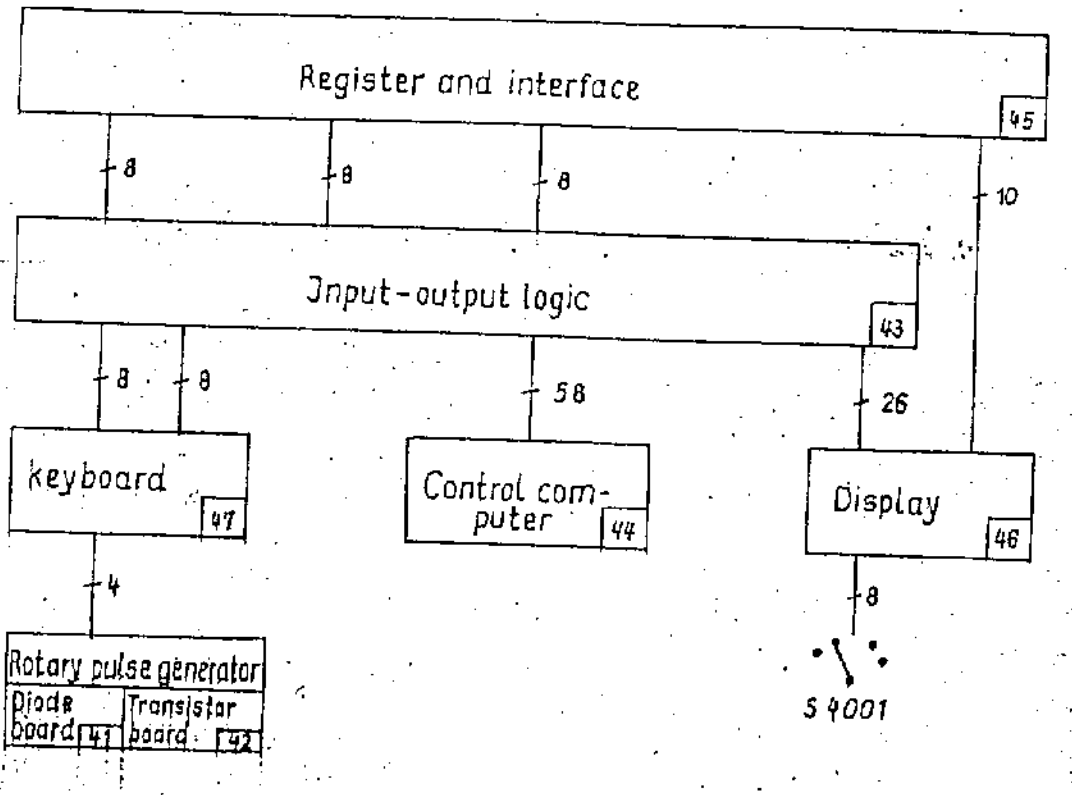

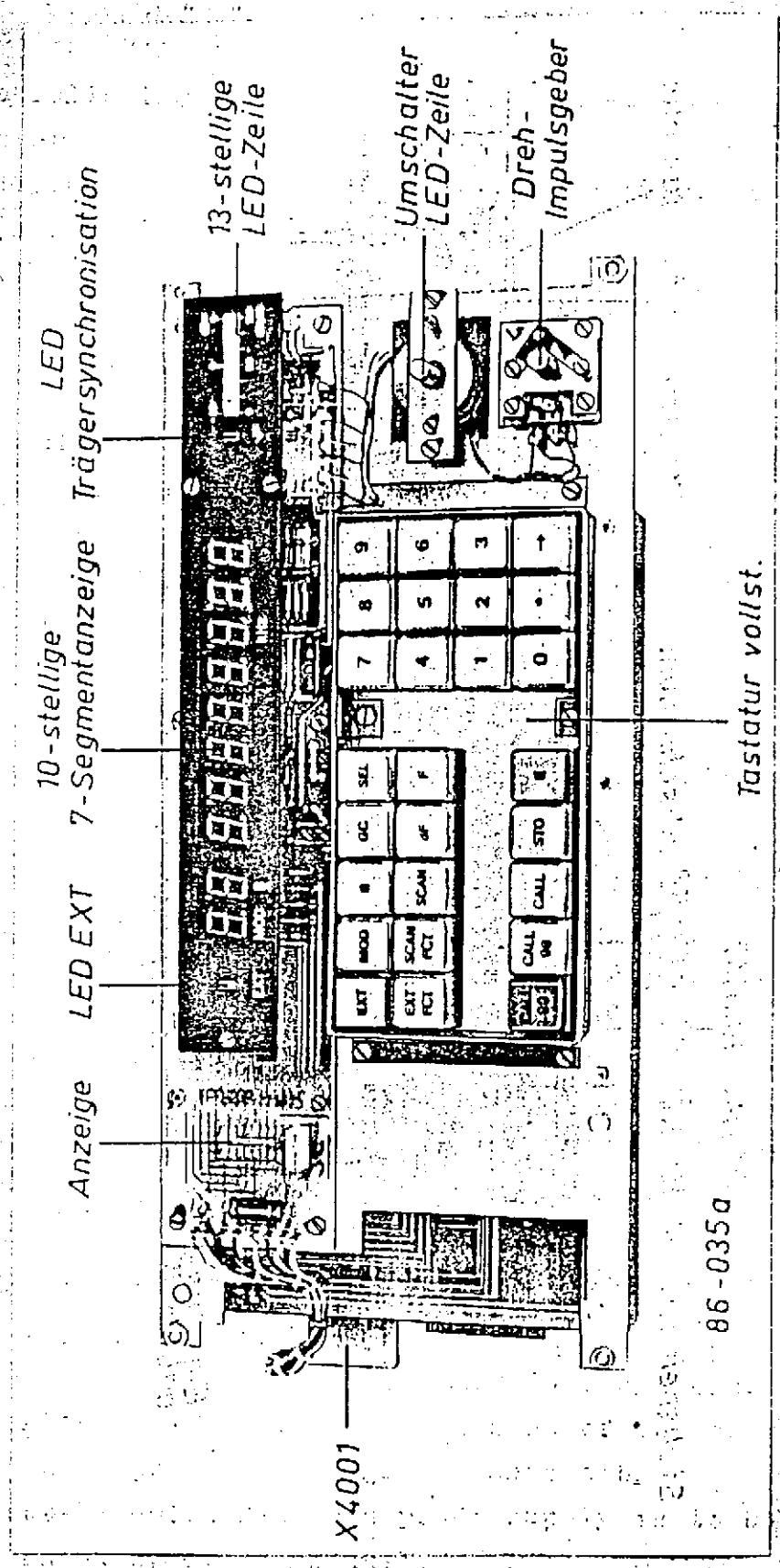

Figure 8

Control unit Front view

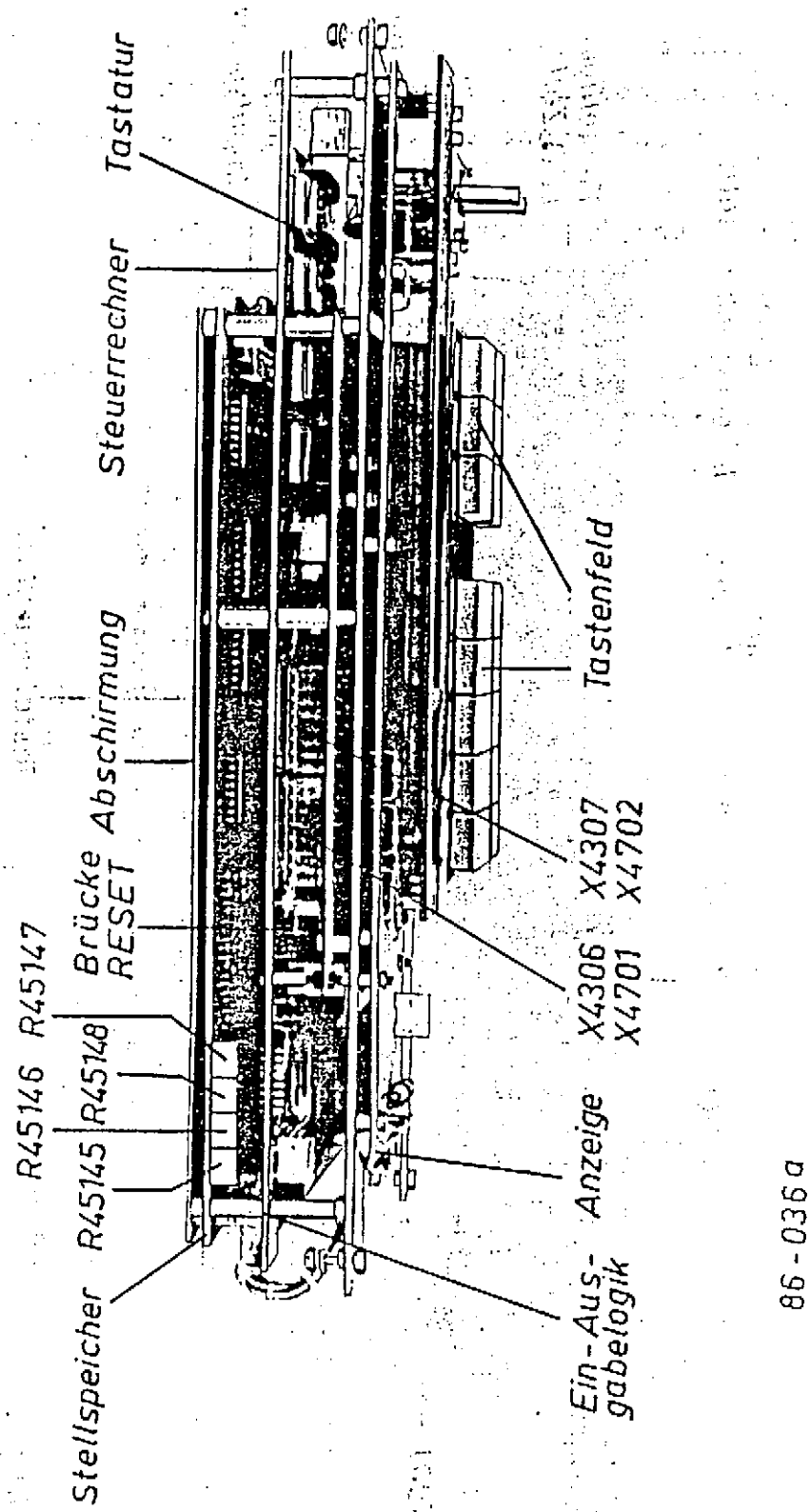

Figure 9
Control unit - view from above

6.2.2. Test and check arrangements

- Control unit inserted

The following components of the plug-in are accessible from above:

. R45145 ... R45147 to balance the control voltage linearization (cf. Section 6.2.9.)
. X4701, X4702 to check and repair the keyboard (cf. Section 6.2.7.)
. Strip 01-02 (RESET) on input-output logic.

Open the receiver front plate, remove screening. The control unit is accessible from the soldering side of the register and interface.
On the soldering side of the control computer U_{RAM} can be checked at C4408.

- Control unit removed

By means of connection adapter P15 the control unit can be operated from an external mains unit; +5 V, +18 V, -12 V, ⊥

- Check of display and keyboard

Open the front plate of the plug-in, slacken the plug-and-socket connetions X4501-X1023 and X4505-X1022, take off the control unit and place it upright such that the plug-and-socket connections can be reestablished again. The complementation side of the display is accessible. If necessary, unscrew the cover.

- Check of control computer and input-output logic

Take off the control computer; establish connection plug-in X1023 - input-output logic X4303/04/05by means of adapter cable P14. The complementation side of the control computer and the input-output logic is accessible.
Connect P14 with P15 when power supply is to be performed from an external mains unit.

6.2.3. Repair sequence 'local operation'

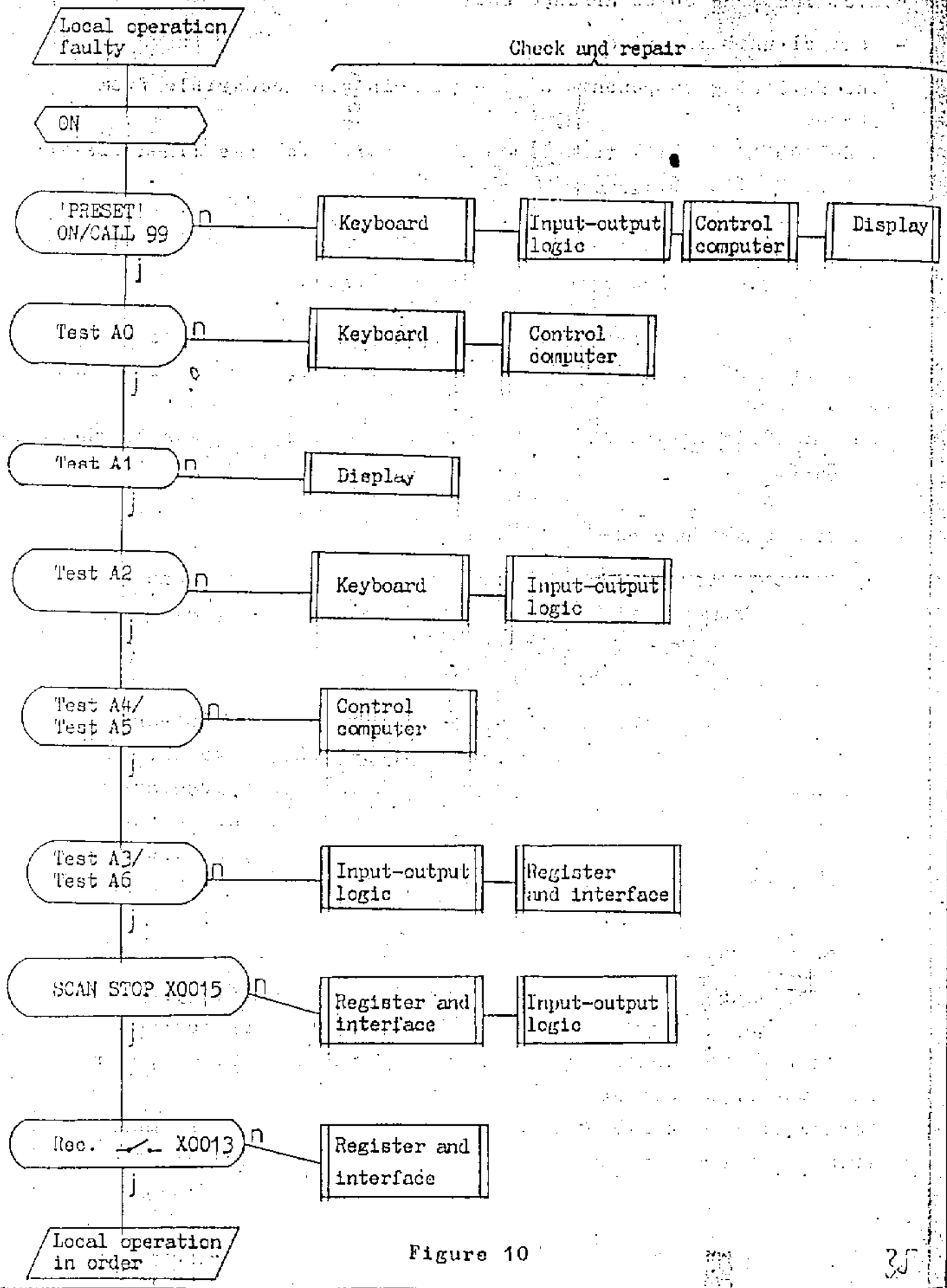

Figure 10

6.2.4. Repair sequence Operation 'external'

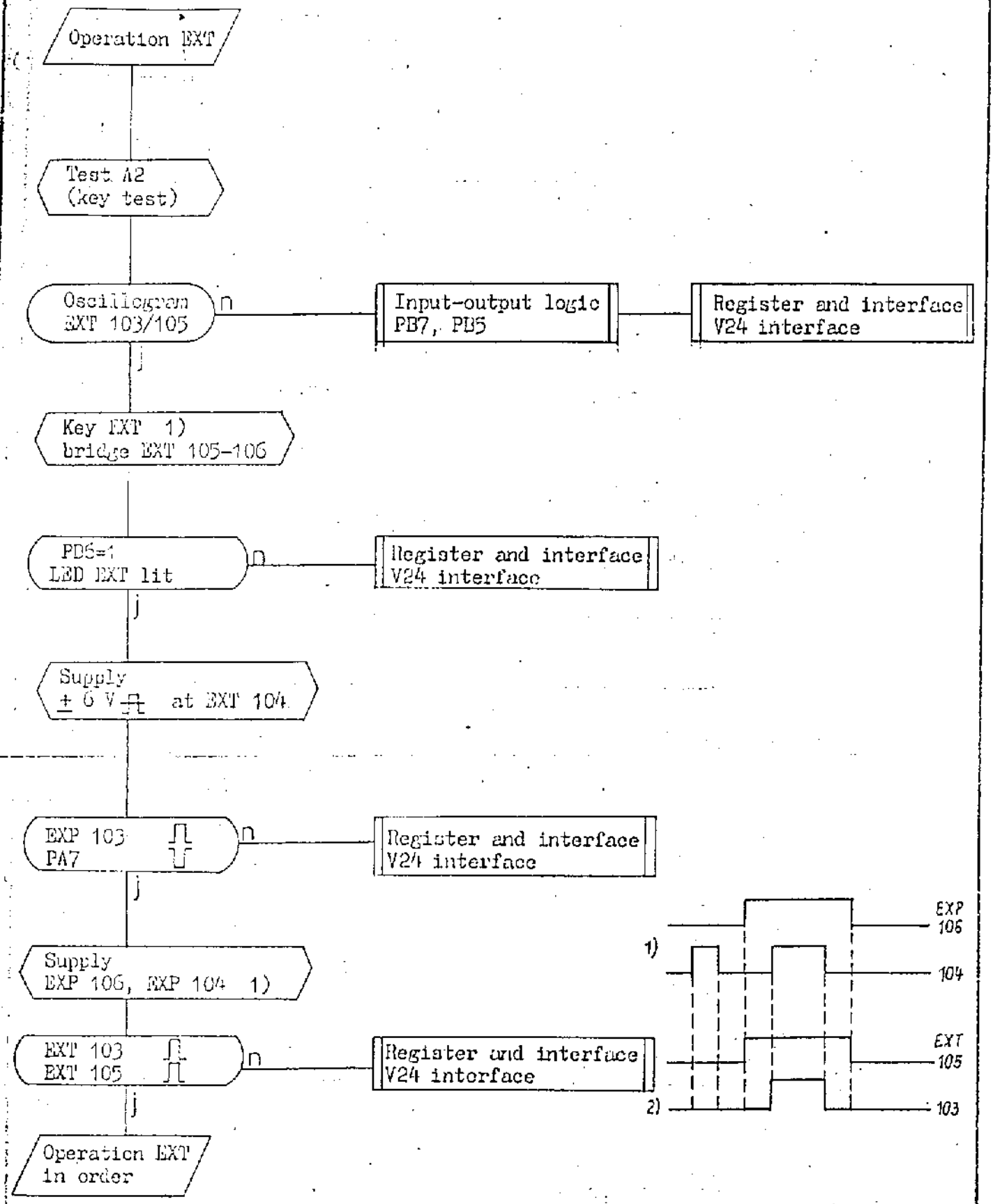

Figure 11

1) The unit is to be programmed in advance as 'slave'.

39

6.2.5. Control computer

- Operating voltages

  +5 V at D04/11, U_{RAM} at C08 (cf. Section 6.2.6. U_{RAM} changeover)

- Input signals of CPU

  $\overline{BUSRQ}$, $\overline{WAIT}$, $\overline{RESET}$, $\overline{NMI}$, $\overline{INT}$ = 1 (≅3.5 V)

  Clock at D04/6 ⎍⎍ 1.2 MHz U_{high} ≧ 4.8 V, U_{low} ≦ 0.5 V

- CPU bus and store selection signals

  Open wire strap 03-04, establish connection 04-13.
  Cyclic program call is performed. The data bus, the address bus and the control bus of the CPU can be oscillographically checked concerning correct low-high signal change. With this, also the connections of the bus lines to the circuits as well as shorts can be checked.

Signal	U_{low}	U_{high}
D0 ... D7		3.5 V
A0 ... A3		>3.5 V
A4 ... A15		>2.5 V
M1, RD, WR, MREQ, RFSH		>2.5 V
CS0 test point 03	<0.7 V	>2.5 V
CS1 R07		>3.5 V
CS2 test point 05		>2.5 V
CS3 test point 07		>2.5 V
CS4 test point 09		>2.5 V
CS5 test point 11		>2.5 V

- Software-aided checks

(cf. equipment documentation Section III/5.2.)

a . Test (key EXT and EXT FCT)

This test, an NMI access to the CPU, checks the function of the input gate PIO port A, i.e. it is tested if the data are red. Furthermore, the function of the EPROMs are checked, i.e. if data are put out.

Troublefree function:
All keys are open (PA 6...PA 0 = 78 H), serial input in STOP condition (PA 7 = 1). All EPROMs supply data.

Display: AA-A0 last receive condition. In condition AA a program loop is running cyclically. It is possible to check oscillographically the CPU signals $\overline{IORQ}$, $\overline{MERQ}$, $\overline{M1}$, $\overline{RD}$, $\overline{WR}$, and the decoder signals CS 0 ... CS 5.

Malfunctioning:
The key code of a faulty key is indicated or PA 7 is not in STOP condition or port A of the PIO does not work.
Display 01 indicates: EPROMs by switching further with key [-] (01, 02 ...); the faulty EPROM does not appear on the display but any display as e.g. FF. Consider the departure from the correct sequence.

b . Test A4 RAM test
Results: FF, F1, F2
FF = troublefree, F1 = RAM 1 (D 4405) faulty,
F2 = RAM 2 (D 4406) faulty.

c . Test A5 ROM test
Results: FF, F1, F2, F3, F4
FF = troublefree, F1 ... F4 = faulty EPROM D 4408 ... D 4411.

Attention

Individual EPROMs must not be exchanged.
When a component - circuits D 4408, D 4409, D 4410, D 4411, (D 4412) - has proved itself to be faulty, the entire pc board control computer 1340.041-01454 is to be replaced.

6.2.6. Input-output logic

Test sequence:

- RESET-and NMI generation
- U_{RAM} changeover
- Input-output gate addresses and assigned output signals

- RESET- and NMI generation

  . unit switch ON/OFF, check voltage curve with double-beam oscillograph P5

+5 V and +18 V

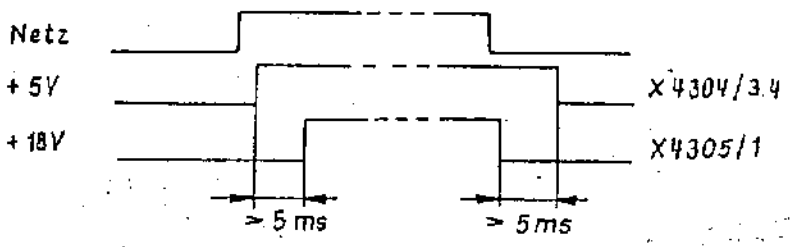

When these conditions are not met — repair power supply in accordance with Section 6.1.

$\overline{NMI}$ and $\overline{RESET}$

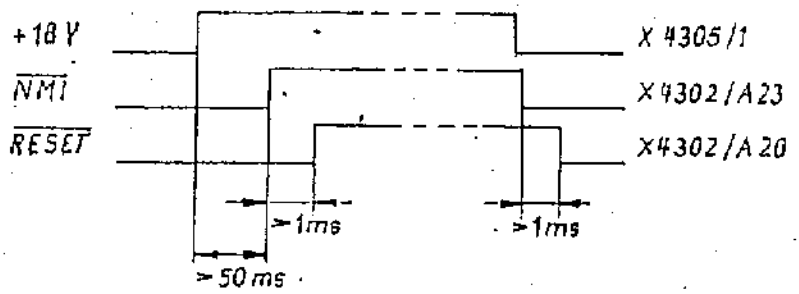

. RESET pulse

Key CALL 99

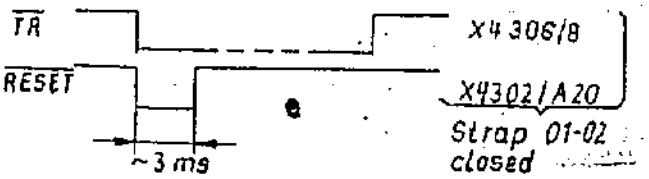

NMI pulse

Keys EXT EXT FCT

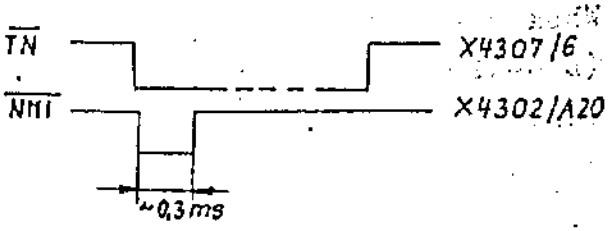

- U_{RAM} changeover

Unit switch	U_{RAM} to C 4408
ON	+5 V from power supply
OFF	+ (3.6 ... 4.1)V from support battery

- Input-output gate addresses and assigned output signals

Input	Output	Pulses to be checked	Output signals
Test	AA	$\overline{30H}$ at D 4302/12 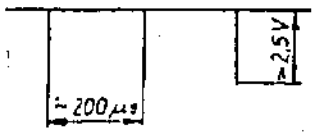	
Test A1	8 ... 8	$\overline{10H}$ at D 4302/14 $\overline{20H}$ at D 4302/13 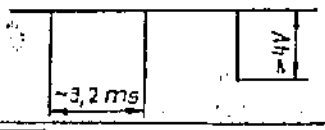	a1 ... g1 a2 ... g2 p1, p2 St0 ... St4 } X 4301 2.)
TEst A2 Key EXT	00	$\overline{30H}$ at D 4303/12 Oscillogram without synchronization U 2,5 V	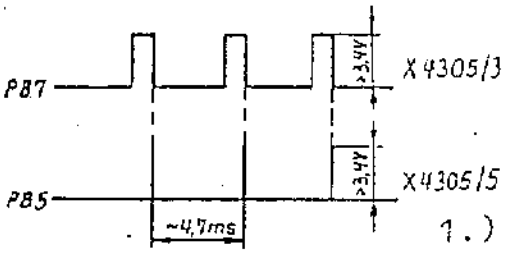 1.)
Test-A3	A3 00	$\overline{10H}$ at D 4302/14 $\overline{20H}$ at D 4302/13 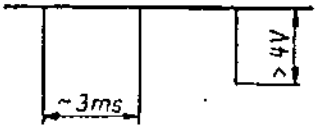 $\overline{50H}$ at D 4302/10 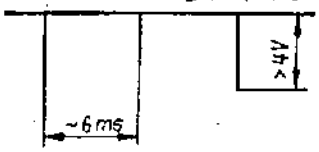	a1 ... g1 a2 ... g2 St0 } X 4301 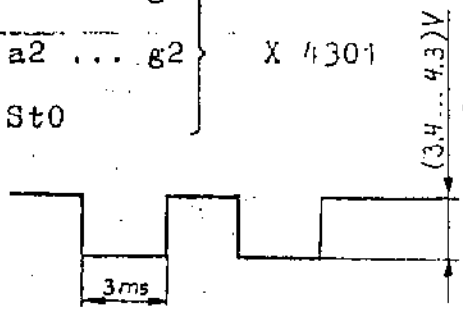
Test A6	A6	$\overline{40H}$ at D 4302/11 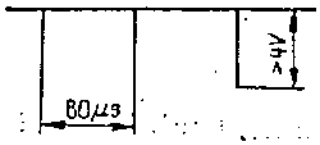	D0 ... D7 to X 4303/1...8 A0 ... A2 at X 4304/6,7,8 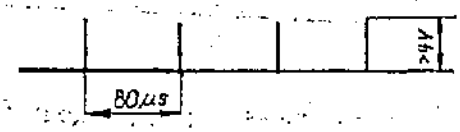

1) cf. Section 6.2.9. V24 interface/example 2
2) cf. Sections 6.2.8. and 6.2.9.

6.2.7. Keyboard Output signals

Figure 12.

Taste	Hexa-code	X4701/ 1 PA6	2 PA5	3 PA4	4 PA3	5 PA2	6 PA1	7 PA0	8 IB	X4702/ 6 IH	t
EXT	00	U	U	U	U	0	0	0	1	1	3 ms
200	6d	1	1	U	1	1	0	1	1	1	
9	62	1	1	U	U	0	1	0	1	1	
[illegible]	67	1	1	U	U	1	1	1	1	1	
[illegible]EL	76	1	1	1	U	1	1	0	1	1	
EXT FCT	20	0	1	0	0	0	0	0	1	1	
SCAN FCT	61	1	1	U	U	0	0	1	1	1	
SCAN	6C	1	1	U	1	1	0	0	1	1	
[illegible]	64	1	1	U	U	1	0	0	1	1	
[illegible]	66	1	1	U	U	1	1	0	1	1	
CALL 99	21	U	1	U	U	0	0	1	0	1	
CALL 90	22	U	1	U	U	0	1	0	1	1	
CALL	63	1	1	U	U	0	1	1	1	1	
[illegible]10	73	1	1	1	U	0	1	1	1	1	
[illegible]	65	1	1	U	U	1	0	1	1	1	
[illegible]1	30	U	1	1	U	0	0	0	1	1	
[illegible]1	31	U	1	1	U	0	0	1	1	1	
[illegible]2	32	U	1	1	U	0	1	0	1	1	
[illegible]3	33	U	1	1	U	0	1	1	1	1	
[illegible]4	34	U	1	1	U	1	0	0	1	1	
[illegible]5	35	U	1	1	U	1	0	1	1	1	
[illegible]6	36	U	1	1	U	1	1	0	1	1	
[illegible]7	37	U	1	1	U	1	1	1	1	1	
[illegible]8	38	U	1	1	1	0	0	0	1	1	
[illegible]9	39	U	1	1	1	0	0	1	1	1	
[illegible]	2E	U	1	U	1	1	1	0	1	1	
[illegible]	36	U	1	1	1	0	1	1	1	1	
EXT+EXT FCT	00	0	0	0	0	0	0	0	0	0	0,5 ms
[illegible]	20	U	1	U	1	0	U	U	1	1	
[illegible]	2d	U	1	U	1	U	0	U	1	1	
keine Taste	70	1	1	1	1	0	0	0	1	1	

Für jede Taste kann der Code statisch erzeugt werden, wenn gleichzeitig die Taste EXT FCT gedrückt wird.

Code can be generated for each key if EXT FCT is pressed simultaneously

- Low/high levels

Static L/H levels are to be provided at the outputs by depressing the respective key. Checks should be performed according to the scheme below.

Outputs		Low		High	
		Key	Level	Key	Level
X 4701/8	$\overline{TR}$	"CALL 99"			
7	PA 0				
6	1				
5	2	"EXT" and			
4	3	"EXT FCT"	<0.5 V	"7"	>4.0 V
3	4				
2	5				
1	6				
X 4702/6	$\overline{TN}$				

- Pulse generation

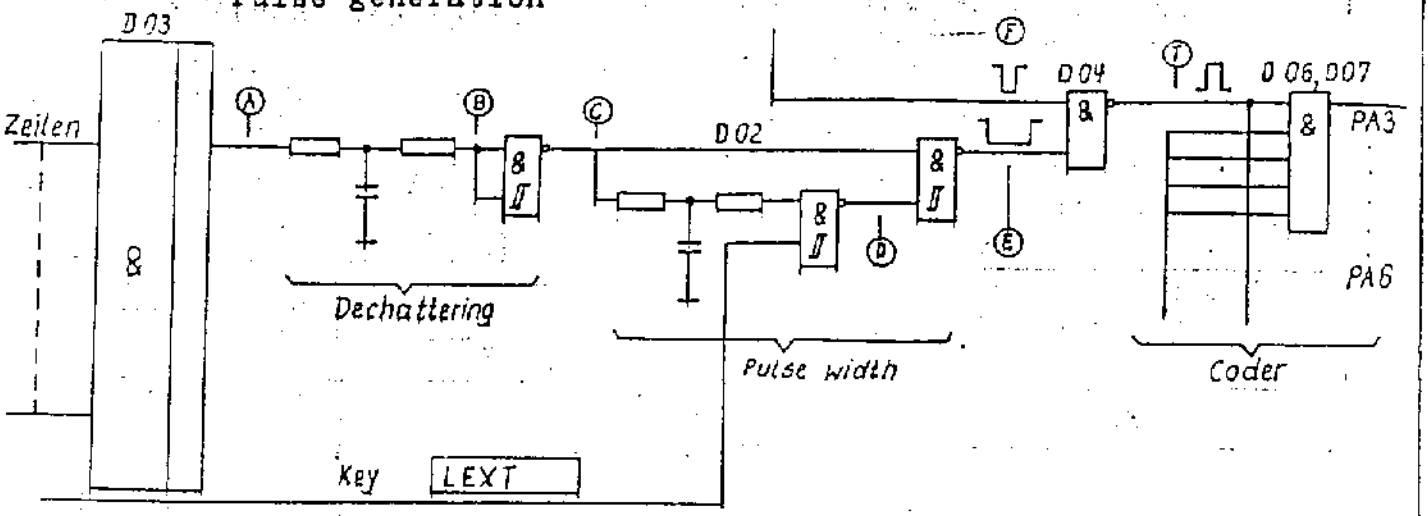

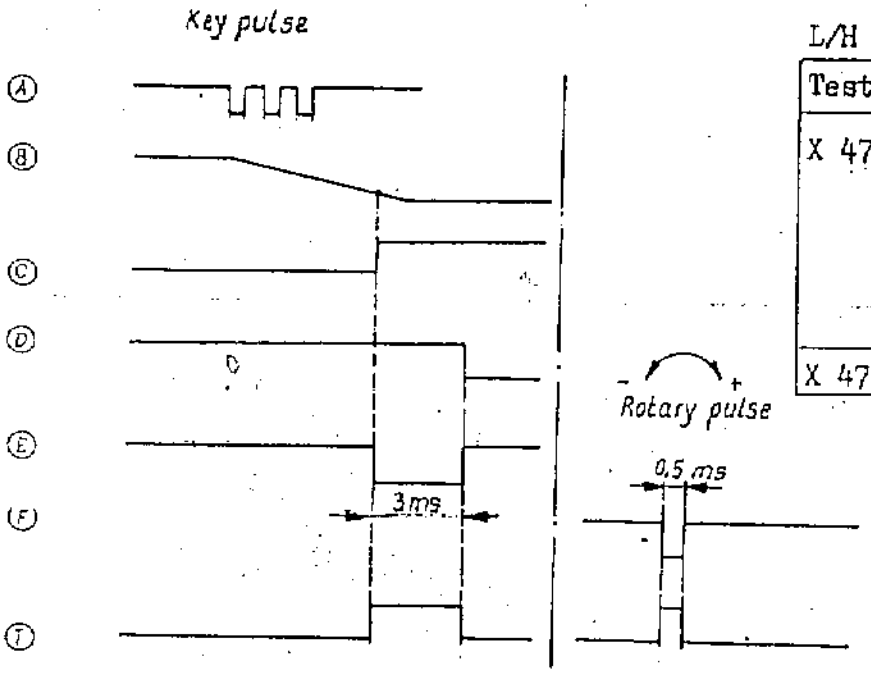

L/H level

Test point		L (V)	H (V)
X 4701/1	PA 6	< 0.5	> 4.5
.	.	.	.
.	.	.	.
7	PA 0	< 0.5	> 4.5
8	$\overline{TR}$	< 0.5	> 3
X 4701/6	TN	< 2.6	> 3

- Pulse diagram for rotary pulse generator

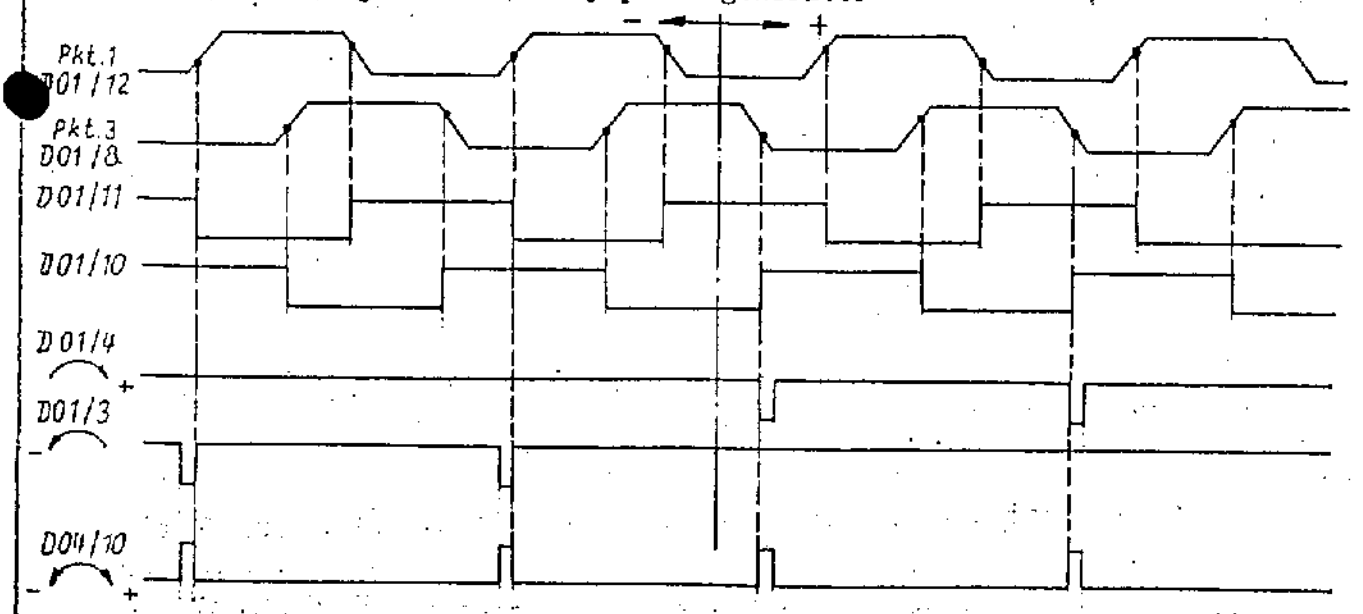

6.2.8.

- Digital display

  Voltage curve in test A1

Segment	Test point at X 4601	Û	
a1 ... g1	A4, B3, B13, B12 A13, A3, B4	~3.4 V	3ms
a2 ... g2	A1, A2, A11, A12 B11, B2, B1		
p1, p2 St0...St4	A5, B10 A8, B9, B7, A10 B8	~4.3 V	15ms
LED EXT	A9	~4.3 V ~4.7 V	~1s

- LED row

  Voltage values

Position S 4001	U at input	Point	U at point 15	Lighting LED
△F x 1	0 V	04	2.7 $V_=$	V 17
△F x 2				V 17
E_γ	4.8 $V_=$	19		V 17
U_{AF}	1.4 V~ (1 kHz)	03	4.7 $V_=$ 1)	V 22

1) correction with R 4631

Check entire row with test A3 according to the Equipment documentation Section III/5,
S 4001 to E_γ .

- Register and interface matrix

The receiver setting is stored in the 12 register circuits D 4504 to D 4515 that form the register and interface being arranged as matrix (7 rows/8 columns). The rows are the addresses, the columns the data.

Assignment of the circuit function

A \ D	7 6 5 4	3 2 1 0
1	D 4505 100 Hz	D 4504 10 Hz
2	D 4707 10 kHz	D 4506 1 kHz
3	D 4509 1 MHz	D 4508 100 kHz
4		D 4510 10 MHz
5	D 4512 MOD	D 4511 B
6	D 4514 SEL	D 4513 SEL
7		D 4515 GC

Example

Short-time reaction at $\Delta F \equiv 1$ kHz

Setting 73 E 12345.67 SEL 1 GC 4

A \ D	7	6	5	4	3	2	1	0
1	0	1	1	0	0	1	1	1
2	0	1	0	0	0	1	0	1
3	0	1	0	0	0	1	0	1
4	0	0	1	0	0	0	1	1
5	0	1	1	1	1	1	0	0
6	0	1	1	0			0	1
7						1	0	0

Note:

Data for B stored in inverted form. The letterings on the lines at the outputs of the register circuits correspond with this matrix.

Example: 3/5 means address 3/data bit 5, i.e. bit 2^1 of the 1-Hz digit of the frequency.

- The frequency data correspond with the decimal places in the 8-4-2-1 code. Output is performed via drivers D 4516 to D 4520. The output lines are marked in accordance with the decimal points. The levels are CMOS levels.
  Example: Setting to 1.23 kHz

Frequency	x 1 kHz			x 100 Hz				x 10 Hz			
Line d3	c3	b3	a3	d2	c2	b2	a2	d1	c1	b1	a1
Logic condition 0	0	0	1	0	0	1	0	0	0	1	1
X 4501 B20	B19	B18	B17	B24	B23	B22	B21	B28	B27	B26	B25

- The selector data are derived automatically from the frequency i.e. the interconnection is contained in the ROM test. The output lines go directly out from the store circuits; the voltages are CMOS levels. For MOD, B and GC the store data are decoded and logically connected. The output signals are generated via driver stages.
- Check of the register and interface outputs
  Precondition: Input and display in order. Input signals A0...A2 at X 4503 and D0...D6 at X 4504 available, if not, check $\overline{40}$ H at input-output logic (cf. Section 6.2.6.). Correct display does not indicate proper output of the register and interface.
  Checking the outputs is performed with test A6

Setting [A6] (test 6)

With key [→] switch digits 00 to 99 further one after the other; Check with this the logic conditions at the soldering side according to the table for register and interface test. (cf. Fig. 13)
Observe the following:

X 4501/a 16 — This point lies next to +18 V
Be cautious with test prod.

X 4505/B7 /B9 — Check of the logic conditions with pull-up resistance 3.3 kohm to 10 kohm

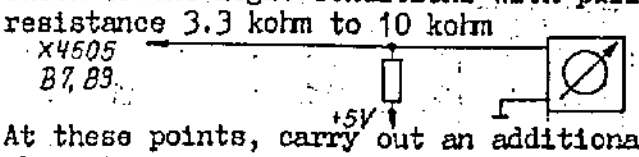

X 4501/A 16, X 4505/B5 /B9 — At these points, carry out an additional check of the short-time reaction at $\Delta F \cong 1$ kHz.

Table

Display in testing procedure

	Measur. point	Register and interface test										Level 0/1
		00	11	22	33	44	55	66	77	88	99	
F	X4501/B3	0	0	1	1	0	0	1	1	0	0	≤0,8V/≥2,4V
	B4	0	1	0	1	0	1	0	1	0	1	
	Code 8 4 2 1 corresponds to d c b a											
	x 10 Hz B25	0	1	0	1	0	1	0	1	0	1	
	x 10 Hz B26	0	0	1	1	0	0	1	1	0	0	
	x 10 Hz B27	0	0	0	0	1	1	1	1	0	0	
	x 10 Hz B28	0	0	0	0	0	0	0	0	1	1	
SEL	X4501/A26	0	1	0	1	0	1	0	1	0	1	≤0,5V/≥4,5V
	A27	0	0	1	1	0	0	1	1	0	0	
	A28	0	1	0	1	0	1	0	1	0	1	
	A29	0	0	1	1	0	0	1	1	0	0	
	B29	0	0	0	0	1	1	1	1	0	0	
MOD	X4501/A25	0	1	0	0	0	0	0	0	0	0	≤0,2V/≥17,5V
	A24	0	0	1	0	0	0	0	0	0	0	
	A23	0	0	0	1	0	1	0	0	0	0	
	A22	0	0	0	1	0	1	0	0	0	0	
	A21	0	0	0	0	1	0	1	0	0	0	
	A20	0	0	0	0	0	1	1	0	0	0	
	A19	0	0	0	0	0	0	0	1	1	0	
	A18	0	0	0	0	0	0	0	0	0	1	
	A17	0	0	0	0	0	0	0	1	1	1	
	A16	0	0	0	0	0	0	0	0	1	1	≤0,2V/≥12V
B	X4505/B1	0	1	0	1	0	1	0	1	0	1	≤1V/≥6V
	B2	0	0	1	1	0	0	1	1	0	0	
	B3	0	0	0	0	1	1	1	1	0	0	
	B4	0	0	0	0	0	0	0	0	0	1	
	B5	0	0	0	0	0	0	0	0	0	1	
GC	X4505/B7	0	1	0	1	0	1	1	1	1	1	≤0,2V/≥3V
	B8	1	0	0	1	1	1	1	1	1	0	
	B9	1	1	1	1	1	0	1	1	1	0	

Figure 13

- Short-time reactions

In case of frequency changes of ≧ 1 kHz the control computer supplies the output GC = 8 that initiates through the monostable flipflop (D 4523) a dynamic behaviour of lines FS 1/0, ✋ and U_{block}. A short lighting up of V 4623 (right LED) presents in the LED row.

Setting [73 E 0.00] dF = 1 kHz

Test point	Line	Pulse	Condition
X 4501/A 16	FS 1/0		MOD 8 or 9
X 4505/B9	✋		GC ≠ 5
X 4505/B5	U_{block}	T	

T = 125 ... 155 ms

- Receive blocking (cf. Equipment documentation, Section II/2.7.)

The blocking signal of + (3...15) V at X 0013/X 0014 and bandwidth B = 9 have the same effects:

Test point	Line	Logic condition	Level
X 4505/B4	5/3	1	≦ 1 V/ ≧ 6 V
X 4505/B5	U_{block}	1	≦ 1 V/ ≧ 6 V
X 4501/A16	FS 1/0	0	≦ 0.2 V/ ≧ 12 V

- SCAN STOP

The control signal at X 0015/X 0016 acts via N 4501/8 and D 4501/4 on PB Ø.

Funtion	$U_=$ at X 0015/X 0016	PB Ø at X 4502/6	Level 0/1
SCAN	-15 V ... +0.8 V 1)	1	≧ 4.5 V
SCAN STOP	+3 V .. +15 V	0	≦ 0.5 V

1) Control signal -15 V ... +8 V is equivalent to 'sockets open'.

Precondition: Function of the signal path in order.

. Setting 1 | 16 E 0.00 | GC 1

Set f_{AF} to 1 kHz with A1 ≈

Set U_{AF} to 0 dB_m (0.77 V) at X 1020/A – B with ≈

Frequency F = 1.50 kHz

Check if U_{AF} ≡ –12 dBm

. Setting 2 | 48 E 1.00 | GC 1

U_{AF} to 0 dBm as above

Frequency F = 2.50 kHz

Check if U_{AF} ≡ –3 dBm

If U_{AF} is not adjustable or in case of distortions, check level with setting 1:

Incoming AF voltage at X 4505/A 13 ~ 0 dBm (0.77 V)

outgoing AF voltage at X 4505/B 13 ~ –12 dBm (0.2 V)

– Checking and balancing the control voltage linearization

Precondition: Function of the signal path in order.

Do not unscrew front panel of the plug-in; balancing elements are accessible from above (cf. Figure 9). Balancing requires feeding of a defined aerial signal with calibration level. Use aerial socket X 0001 at the casing rear; Z = 75 ohm. The voltages to be supplied are emf ratings.

. Setting | 47 E 4500.00 | GC 1, SEL 0

. Frequency setting on test oscillator 4501.00 kHz

Make use of A3, perform balancing according to the table below:

Aerial emf	Number	Balancing element	Remarks
30 dB (µV) ≙ 32 µV 90 dB (µV) ≙ 32 mV	15 45	R 45 145 R 45 146	alternating until residual error = 0
10 dB (µV) ≙ 3.2 µV	05	R 45 148	
120 dB (µV) ≙ 1 V	60	R 45 147	

Check by repetition

In balanced condition, the display fault amounts in digits to ± 2, i.e. to ± 4 dB (µV).

- V-24 interface

Lines

101 Protective earth
102 System earth
103 Transmitting data to data transmission equipment (DÜE)
104 Receiving data from DÜE
105 Request to transmit to DÜE
106 Ready for transmission from DÜE

. Schematic circuit diagram

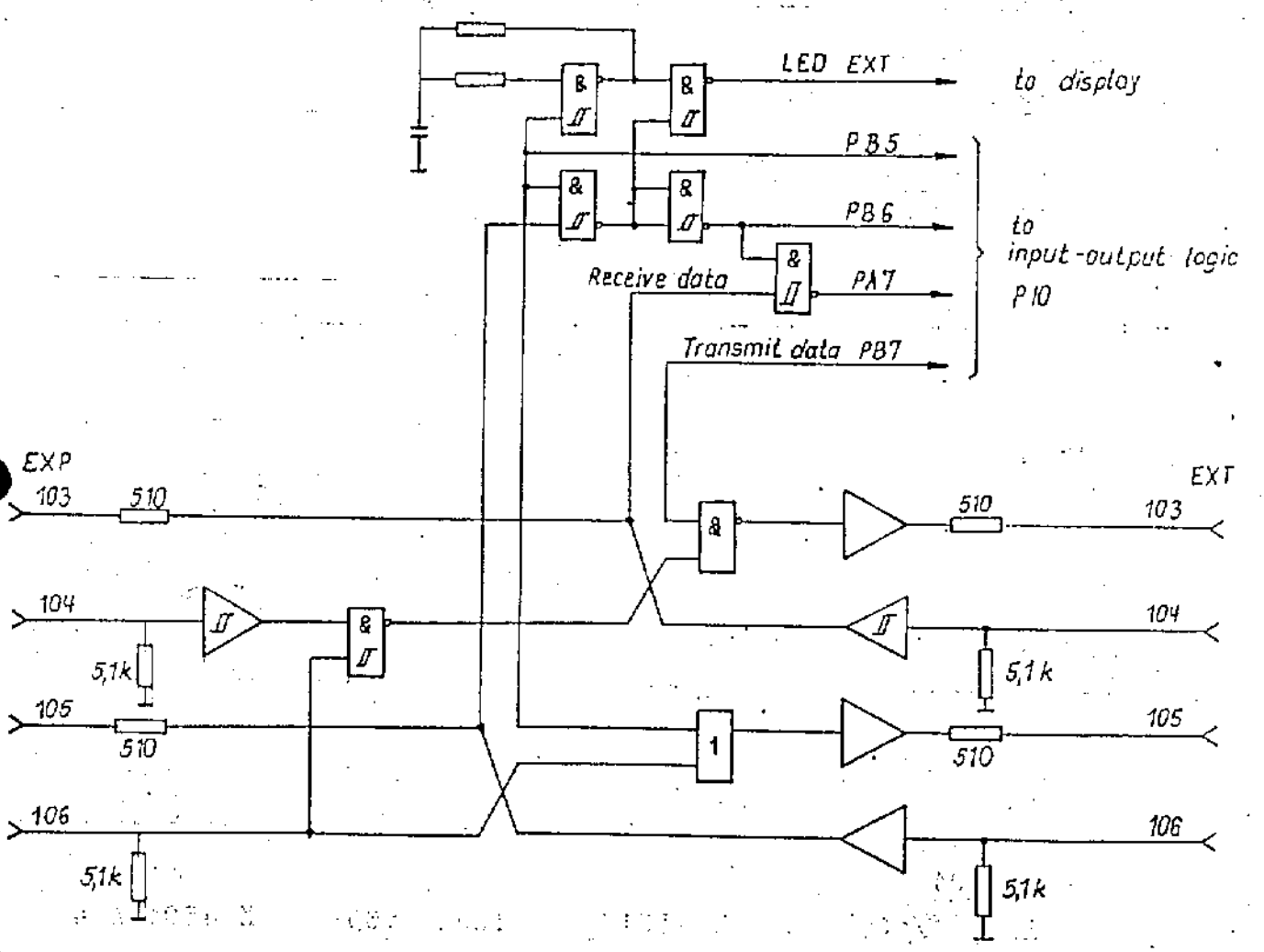

Setting test A2

Double-beam oscillograph

B channel at line 1/103, X 0005/E - A, B (⊥)
A channel at line 1/105, X 0005/C - A, B (⊥)
} A channel synchronizes B channel

Oscillograph pulse curve

Example 1 Key [1] , 31 H

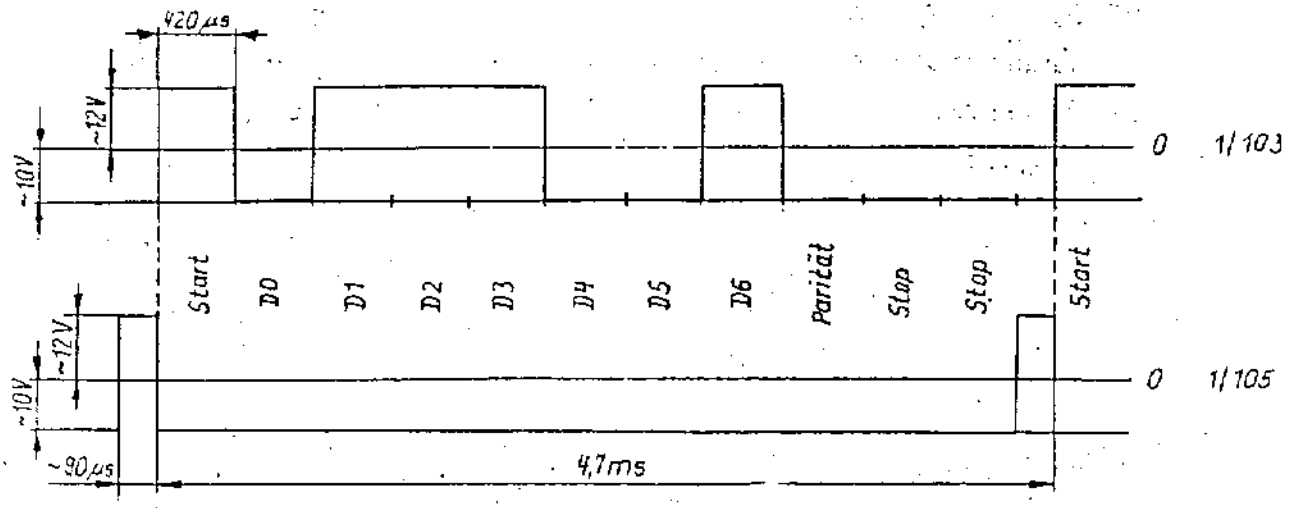

If no double-beam oscillograph available, select key [EXT] , 00 H. Oscillograph lines 1/103 and 1/105 separately.

Example 2 Key [EXT] , 00 H

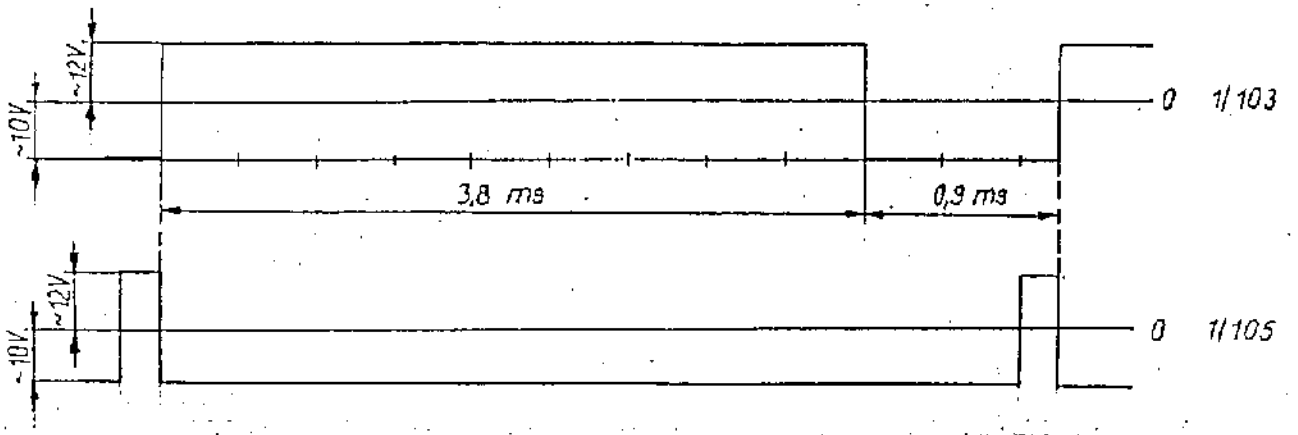

If no pulses can be detected, trace the signal back up to X 4501

Line 1/103 X 4501/A2, line 1/105 X 4501/A 4

6.3. Frequency processing

6.3.1. Troubleshooting sequence

The test programs for troubleshooting are given in the following in accordance with the principle of frequency processing. Each program starts with indication of the fault, e.g.

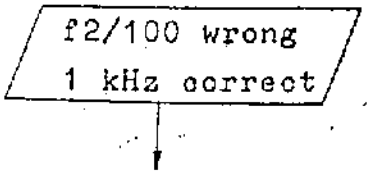

that means that frequency f2/100 is wrong, the 1-kH signal correct.

After that, different test measurements are carried out which are indicated as abridged questions, e.g.

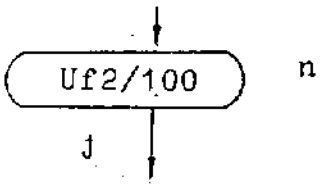

that means that the volta or the voltage curve Uf2/ are available as represen in the General diagram.

The measurements indicate which component is to be checked. The required test program or test instructions are given, e.g. → PLL2

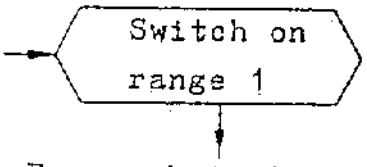

For each test program the measuring points are given in the opposite diagrams.

The test program is terminated with the information that the component to be tested is troublefree, e.g.

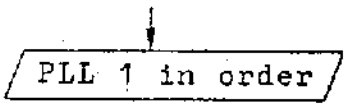

6.3.2. Frequency processing - outline

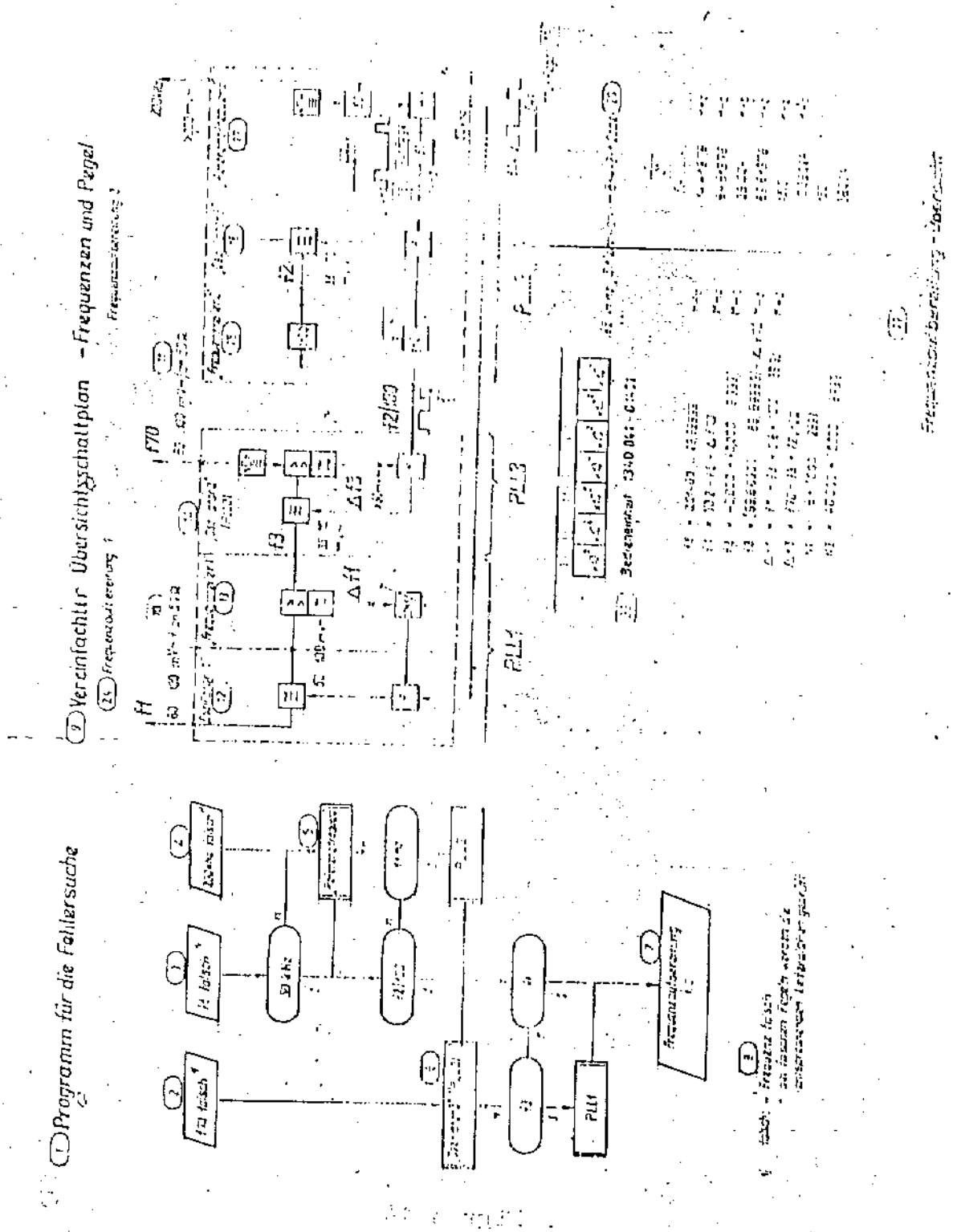

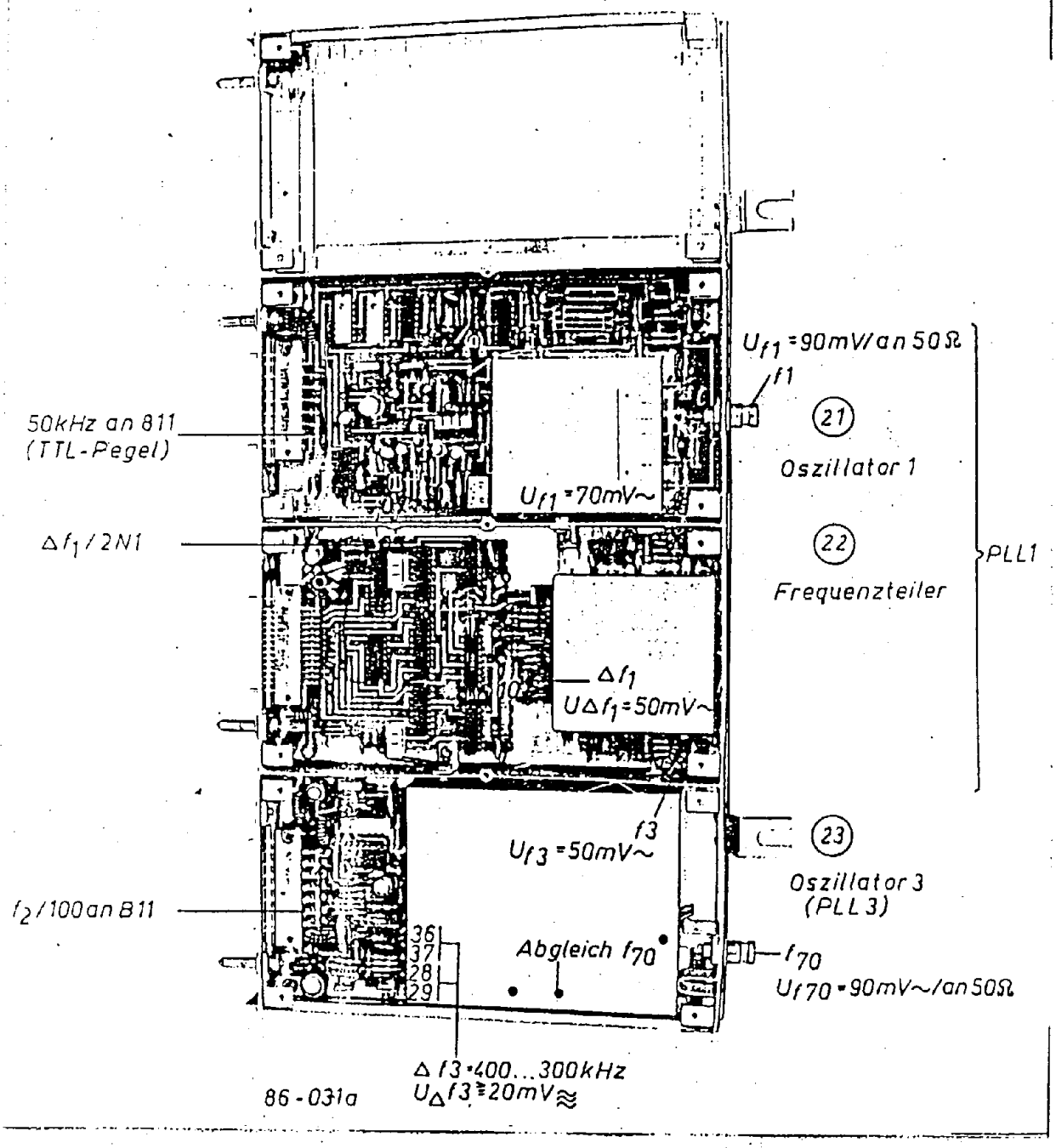

Figure 14

Frequency processing 1 1340.041-01211

6.3.3. Phase-lock loop 1 (PLL1)

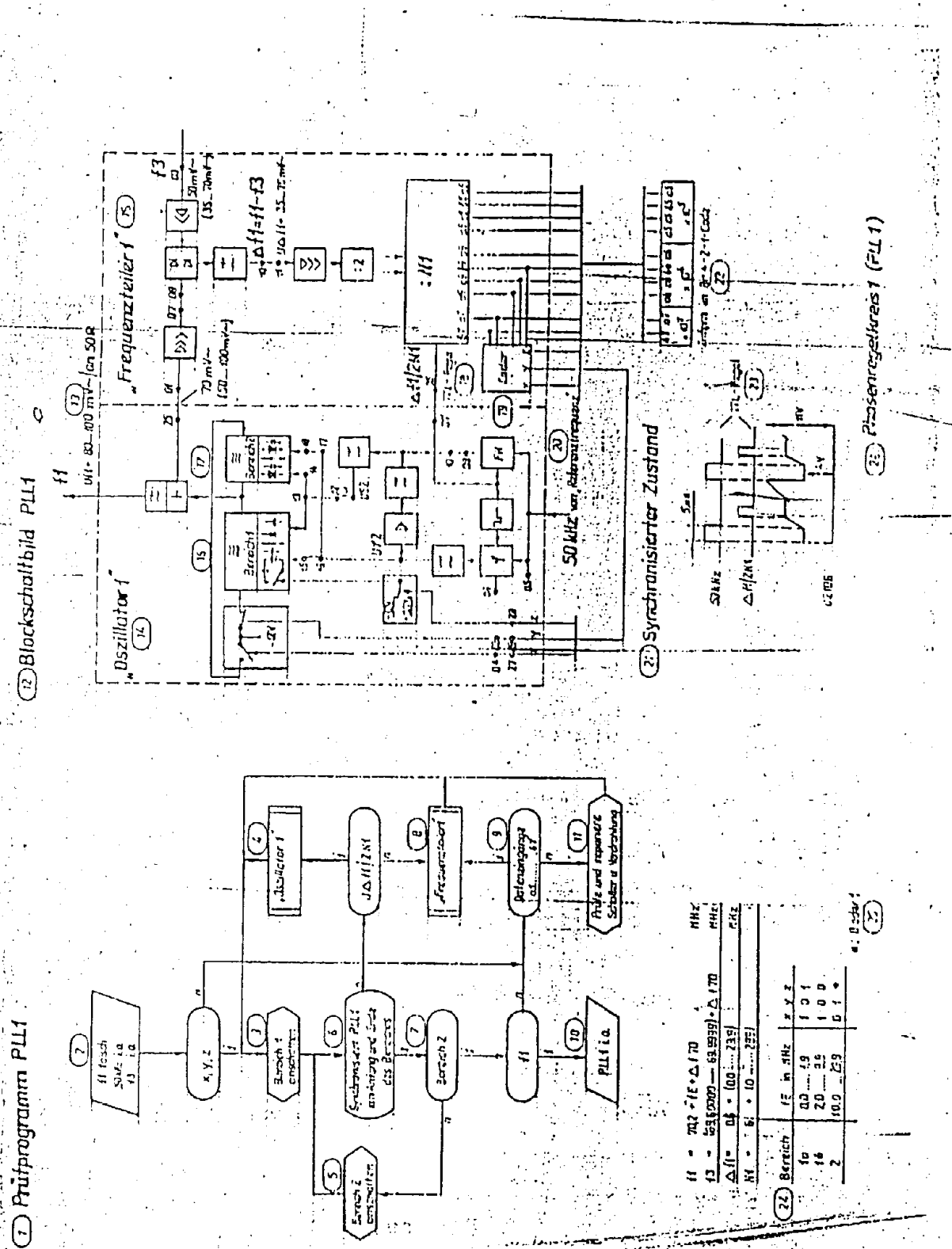

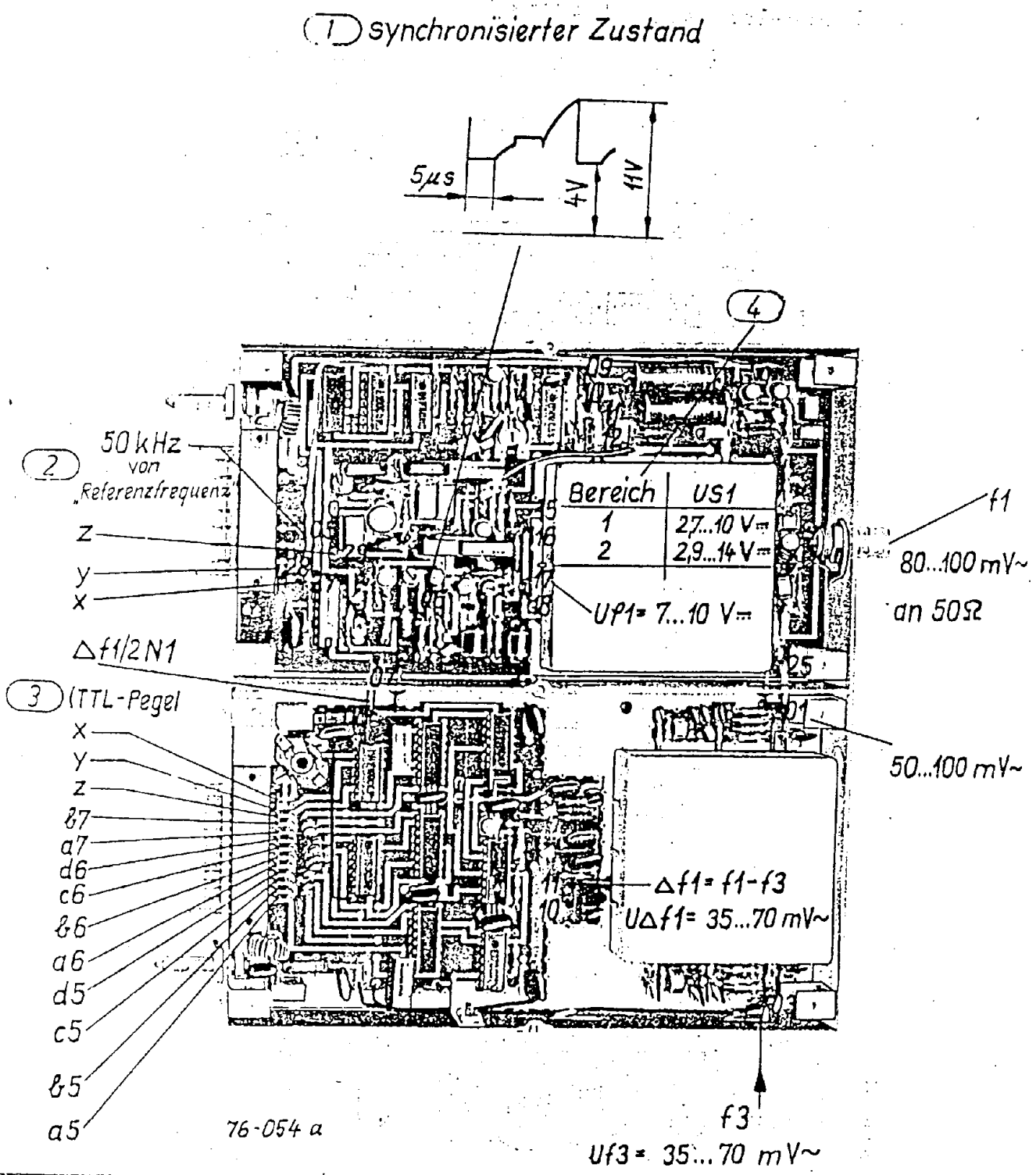

Figure 15
Positions of test points PLL1

(1)

Kontrolle des Frequenzdiskriminators (Fangbilfe)

D 01,D02,D03, V10, V11 u. V12

Brücke 09...10 öffnen

Brücke 11...12 öffnen

an 12 ca. +3 V anlegen (C15 hat zugeordnete Spannung)

fe	f1/N1	D 03 Pin 9	D 03 Pin 5	09
10 000 00	> 50 kHz			< 1 V
30 000 00	< 50 kHz			> 14 V

Kontrolle des Verstärkers N02

Brücke 09...10 öffnen.

Brücke 11...12 öffnen

Mit R2125 einstellen:

$U_{pin2} \gg U_{pin5}$ —— U (11) < 1 V

$U_{pin2} \ll U_{pin5}$ —— U (11) >13 V

Abgleich der Oszillatorfrequenz

Wenn V2123, V2125, V2126 oder V2127 gewechselt werden, ist ein Abgleich der Oszillatoren notwendig. Der Abgleich erfolgt im Bereich 1 mit C24 und im Bereich 2 mit C34 durch Wechseln der Kondensatoren.

Abgleichbedingungen (mit Abschirm-Kappe gemessen?)

Frequenz-Einstellung	U_S an Pkt. 11/P 8, R_i>3 MOhm
1. 10 000 00	2,7...2,9 V = U (1.)
2. 30 000 00	< 14 V
3. 31 000 00	synchronisiert ?
4. 00 000 00	U (1.) - 0,2 V
5. 09 999 99	9...11 V

Abgleich des Phasendiskriminators

Einstellen mit R 2125

U P = 7...10 V an Pkt. 15...18 bei f_E = 20 000 00

Oszillogramm an C2108 und R2111 beachten!

(2) Arbeitsweise des Phasendiskriminators

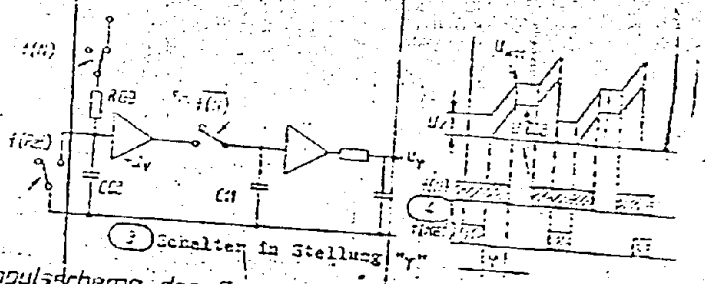

(3) Schalter in Stellung "Y"

(5) Impulsschema des Frequenzdiskriminators

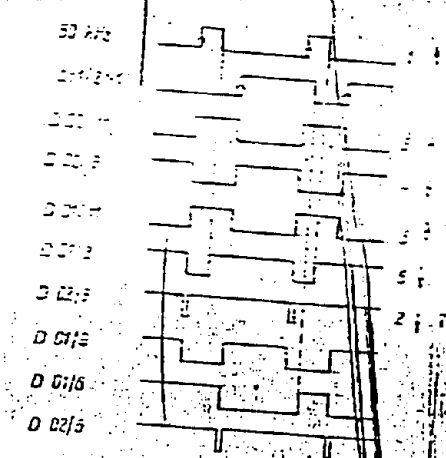

(6) Schaltbilder hervorgehen durch Zeichnung von Bonn

f2/N2 > 50 kHz

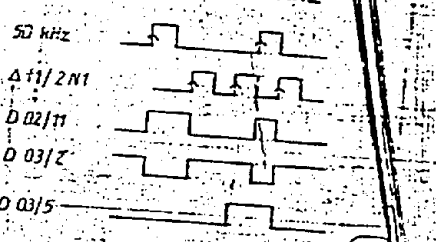

(7) Oszillator 1

Test sequence

No output voltage F1

1. UC45 or UC47
2. U 1 (15...18)
3. US1 (12)
4. Does oscillator work?

Control circuit does not synchronize (06)

1. Operating voltages
2. 50 kHz (ref) (05)
3. ΔF1/2N1 (07)
4. U f 1 (15...18)
5. US1 (12)
6. Open bridge 11...12, apply approx. +8 V dc to 12, synchronize with frequency switch '10 MHz' and '1 MHz'
7. Check capture aid and N 02
8. Balance phase discriminator

6.3.4. Oszillator 1

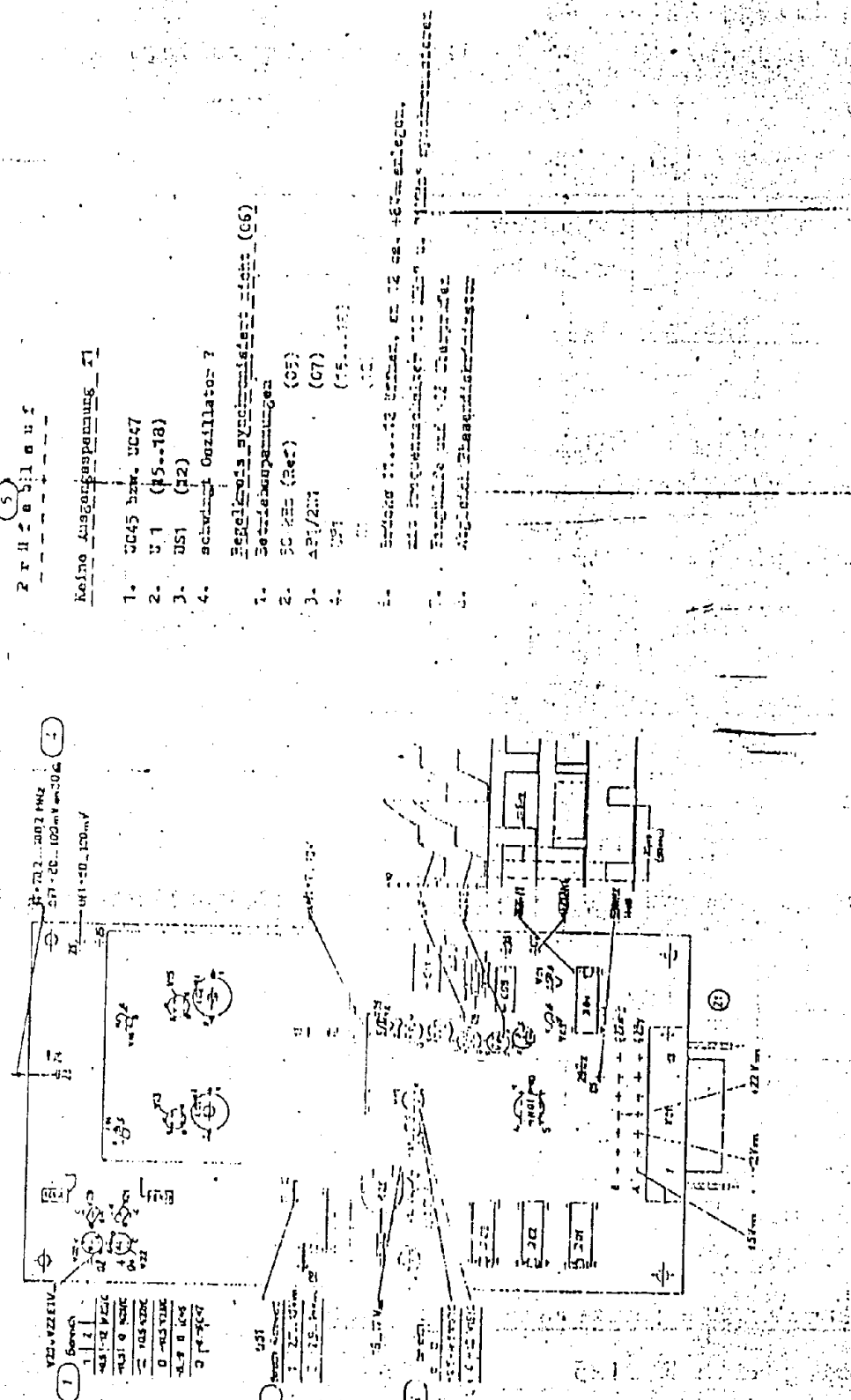

Check of the frequency discriminator (capture aid)

D01, D02, D03, V10, V11 and V12

Open bridge 09 ... 10
Open bridge 11 ... 12
Apply approx. +8 V dc to 12 (suitable voltage applied to C15)

fe	f1/N1	D03 Pin 9	D03 Pin 5	09
10 000 00	> 50 kHz			< 1 V
30 000 00	< 50 kHz			> 14 V

Ckeck of the amplifier N 02

Open bridge 09 ... 10
Open bridge 11 ... 12

Adjust with R 2125

$U_{pin\ 4} >> U_{pin\ 5}$ ⟶ U (11) < 2 V

$U_{pin\ 4} >> U_{pin\ 5}$ ⟶ U (11) > 13 V

Balancing the oscillator frequency

After replacing V 2125, V 2126, V 2128 or V 2129 the oscillators have to be balanced. Balancing is performed in range 1 with C24 and in range 2 with C34 by exchanging the capacitors.

Balancing conditions (had measurement been performed with screening cap?)

Frequency setting	U_S at point 11 P 8, R_i 3 Mohm
1. 10 000 00	2.7 ... 2.9 V = U (1.)
2. 30 000 00	< 14 V
3. 31 000 00	synchronized ?
4. 00 000 00	U (1.) - 0.2 V
5. 09 999 99	9 ... 11 V

Balancing the phase discriminator

Setting with R 2125
U φ = 7 ... 10 V at point 15 ... 18 at f_E = 20 000 00
Obsereve oscillogram at C 2108 and R 2111!

6.3.5. Frequency divider 1

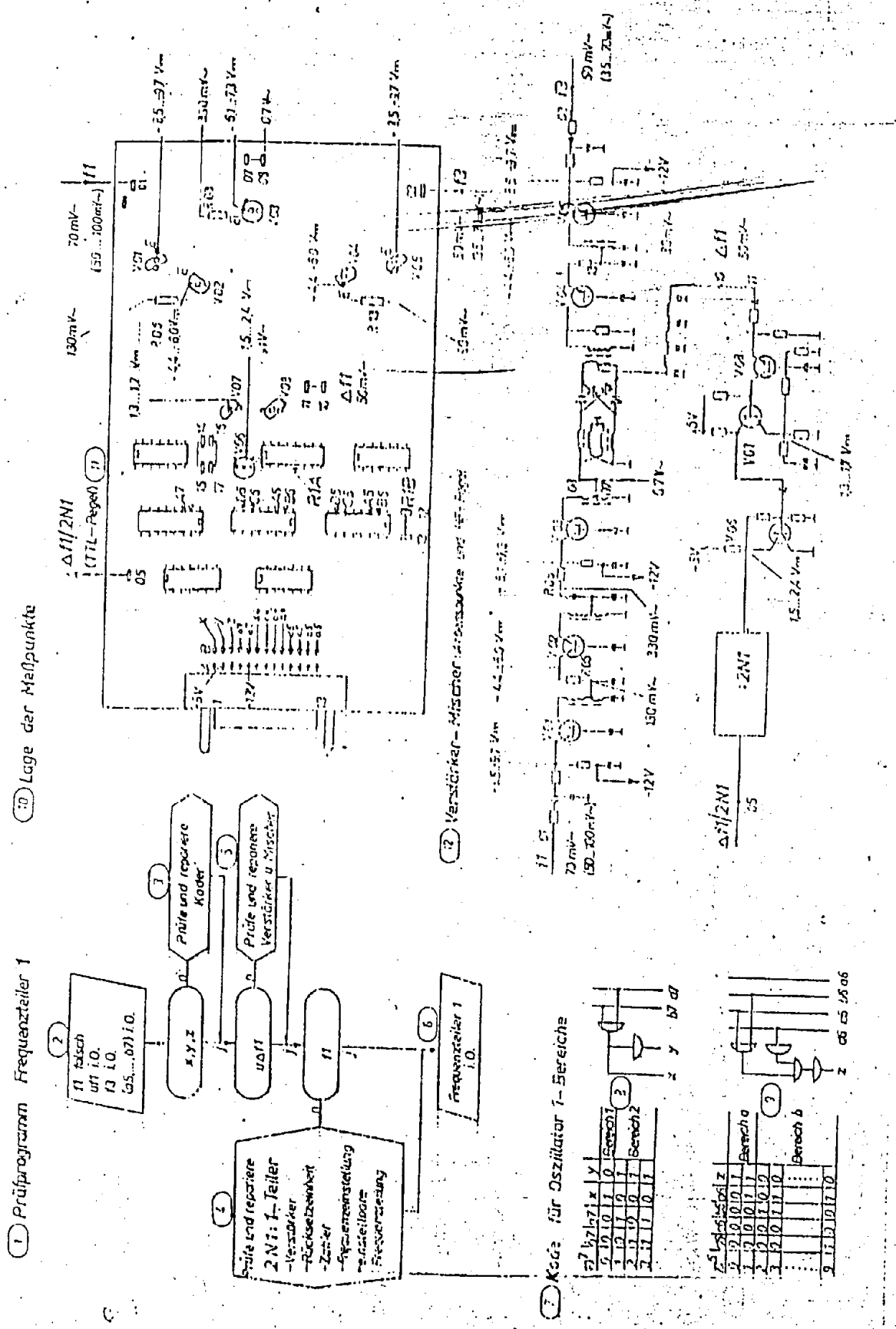

(1) Prüfung des Einstellbaren Frequenzteilers 1

Rücksetzeinheit (3:1 - Teilung)

(2)

- Brücken 2 - 13 offen
  4 - 15 verbunden
  6 - 17 offen
  8 - 16 verbunden

Teil an 00/5

$\overline{R1A}$ an D5

R1B an +2

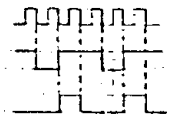

- 50 Hz - Schaltar auf „T"
- U Δf1 = 50 mV~

Zähler A/B = 2000

(3)

- Brücken 2 - 13 offen
  4 - 15 offen
  6 - 17 offen
  8 - 16 verbunden

(4)

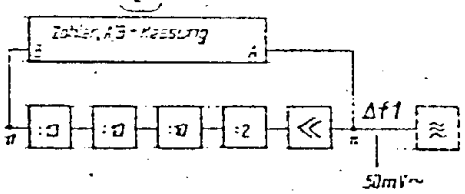

- U Δf1 = 50 mV~

Frequenzeinstellung

(5)

- Brücken 2 - 13 offen
  4 - 15 offen
  6 - 17 offen
  13 - 12 verbunden
  15 - 14 verbunden

Größe: D5 - A5
D5 - B5
⋮
D7 - B7

- U Δf1 = 50 mV~

Einstellbare Frequenzteilung A/B = 2N1 = 2 (5 + (0 ... 999))

(6)

- Brücken 2 - 13 verbunden
  4 - 15 verbunden
  6 - 17 verbunden

(7)

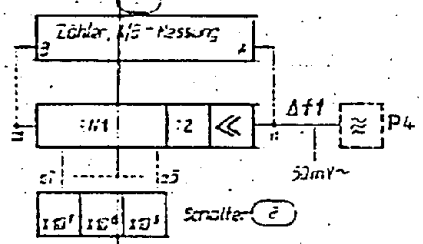

- U Δf1 = 50 mV~

(9) Für die Fehlersuche kann man am Eingang (Punkt 11) ein Signal mit einem Pegel von 50 mV~ aus einem externen Generator (P4) einspeisen

Einstellbarer Frequenzteiler 1

(10)

Eingangsfrequenz	Δf1 = 0,5 ... 25,5 MHz
Ausgangsfrequenz	Δf1/2N1 = 50 kHz, im synchronisierten Zustand von PLL 1.
Teilerfaktor	2N1 = 2 · (5 + n1)
Zählanfang	n1 = 000 ... 999 Ziffernwahl im 8-4-2-1-Code
Zählende	n1 = 994
Zählung	rückwärts, im 8-4-2-1-Code

(11) Blockschaltbild

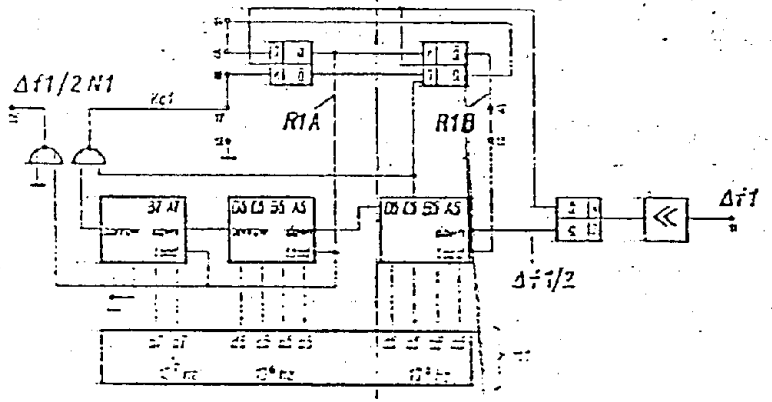

Impulsdiagramme für 2 Beispiele

(12)

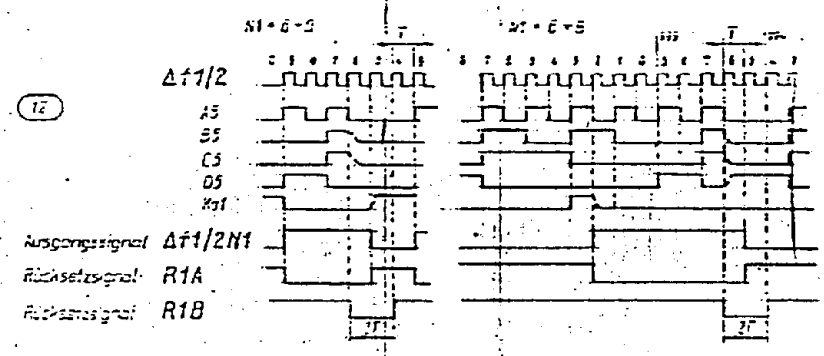

(13)

Frequenzteiler 1

Level balancing: Accomplish the following adjustments:

With L 04	70-MHz voltage at 17 to minimum
With L 02	70-MHz voltage at 17 to maximum
With R 37	70-MHz voltage at 26
With R 28	70-MHz voltage at 17

Frequency balancing

Balance f = 70 MHz with L 03, $\Delta f < \pm 150$ Hz.

6.3.6.2. f_3 oscillator

Level balancing f_3:

Set 03 to ~ 50 mV/50 ohm with R 02 (tapping on the coil decoupling loop of L 01).

Frequency balancing f_3:

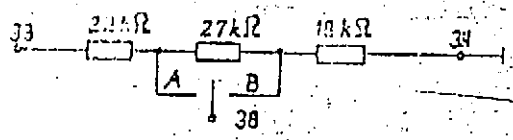

Open bridge 38/39.

Apply positive voltage via opposite voltage divider to 38.

In position A (10 V dc) $f_3 > 69.7$ MHz; in position B (4 V dc) $f_3 < 69.6$ MHz. If this cannot be reached, change C 04. Increasing C 04 causes decrease of frequency.

6.3.6.3. Phase discriminator

Image wave test:

$f_3 > 70$ MHz --point 9/D02=low level --$U_{39} < 2$ V dc

Capture test:

$f_2/100 = 350$ kHz at 35

$f_3 < 69.650$ MHz --wide negative pulses at point 5/D-02

--$U_{39} > 13$ V dc

$f_3 > 69.650$ MHz --wide negative pulses at point 9/D02

--$U_{39} < 2$ V dc

(The narrow negative pulses presenting at point 9/D 02 or 5/D 02 - approx. 50 ns - are only visible with appropriate setting of the oscillograph.)

Phase discriminator:

Close bridge 38/39.

PLL synchronized ($U_{39} = +4 \ldots +11$ V).

In case of triggering with $f_2/100$ the oscillograph supplies a stationary pattern of P30 and P54.

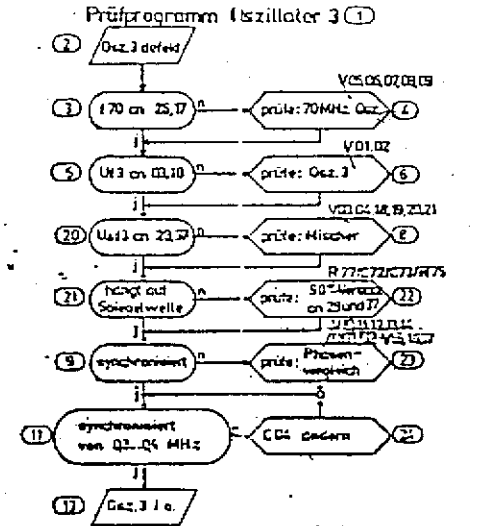

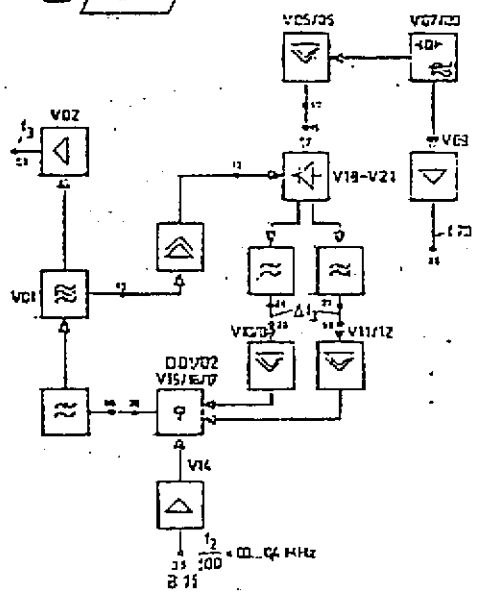

(13) Oszillator 3

(14) 70 MHz-Oszillator

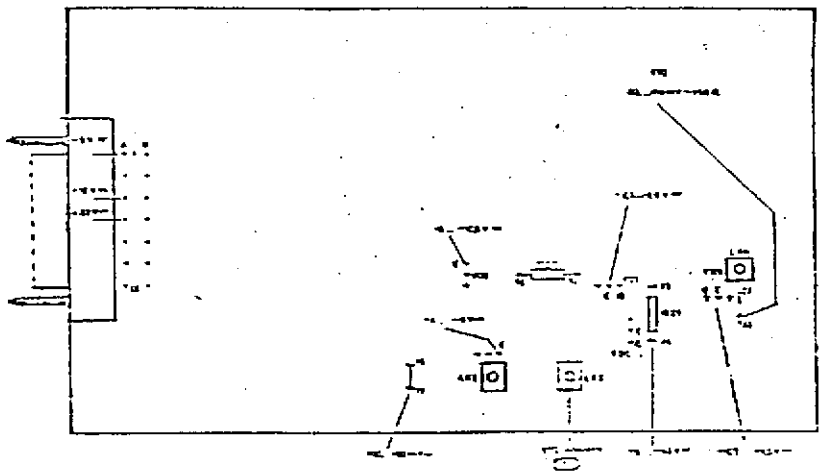

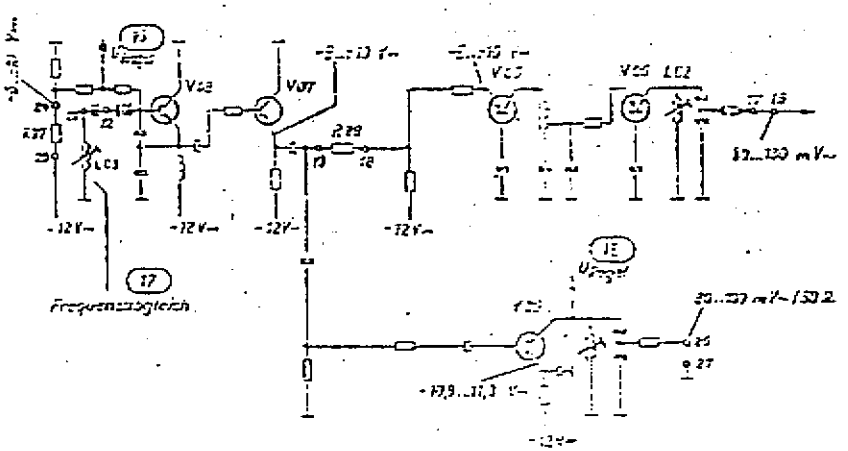

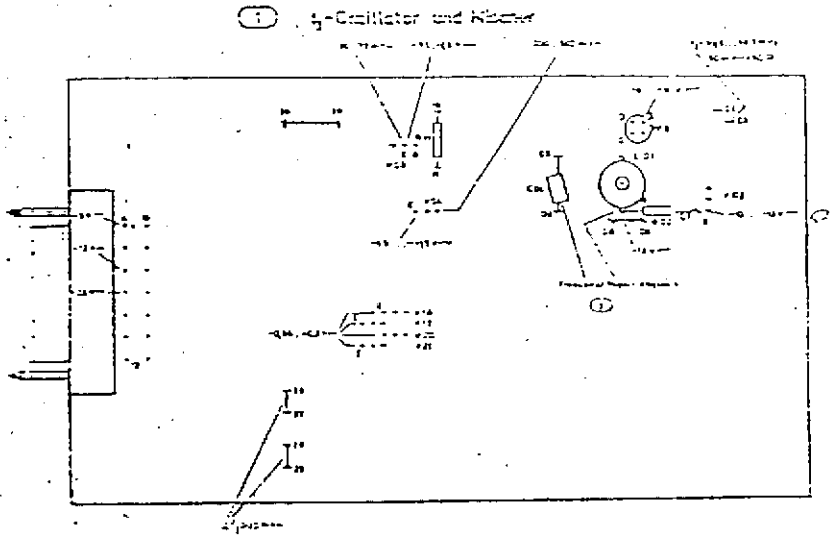

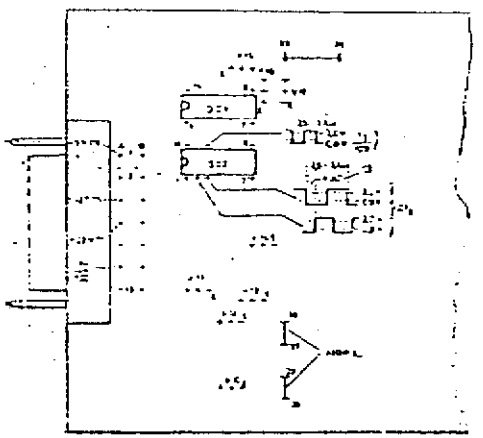

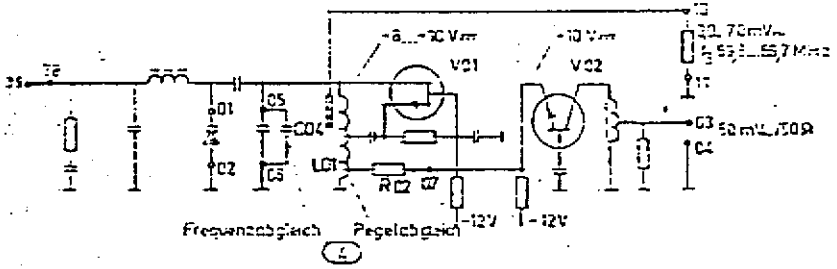

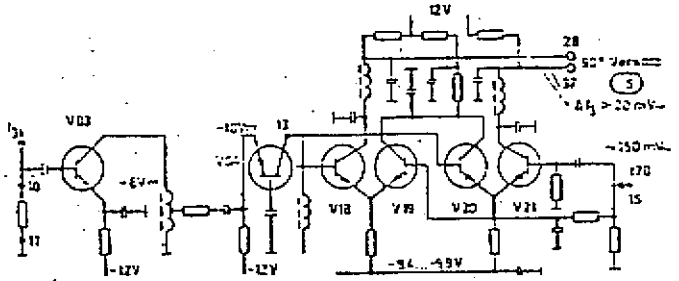

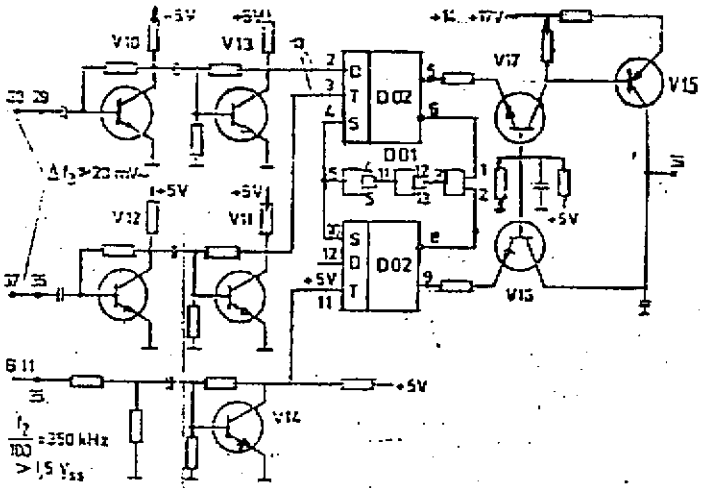

Oszillator 3

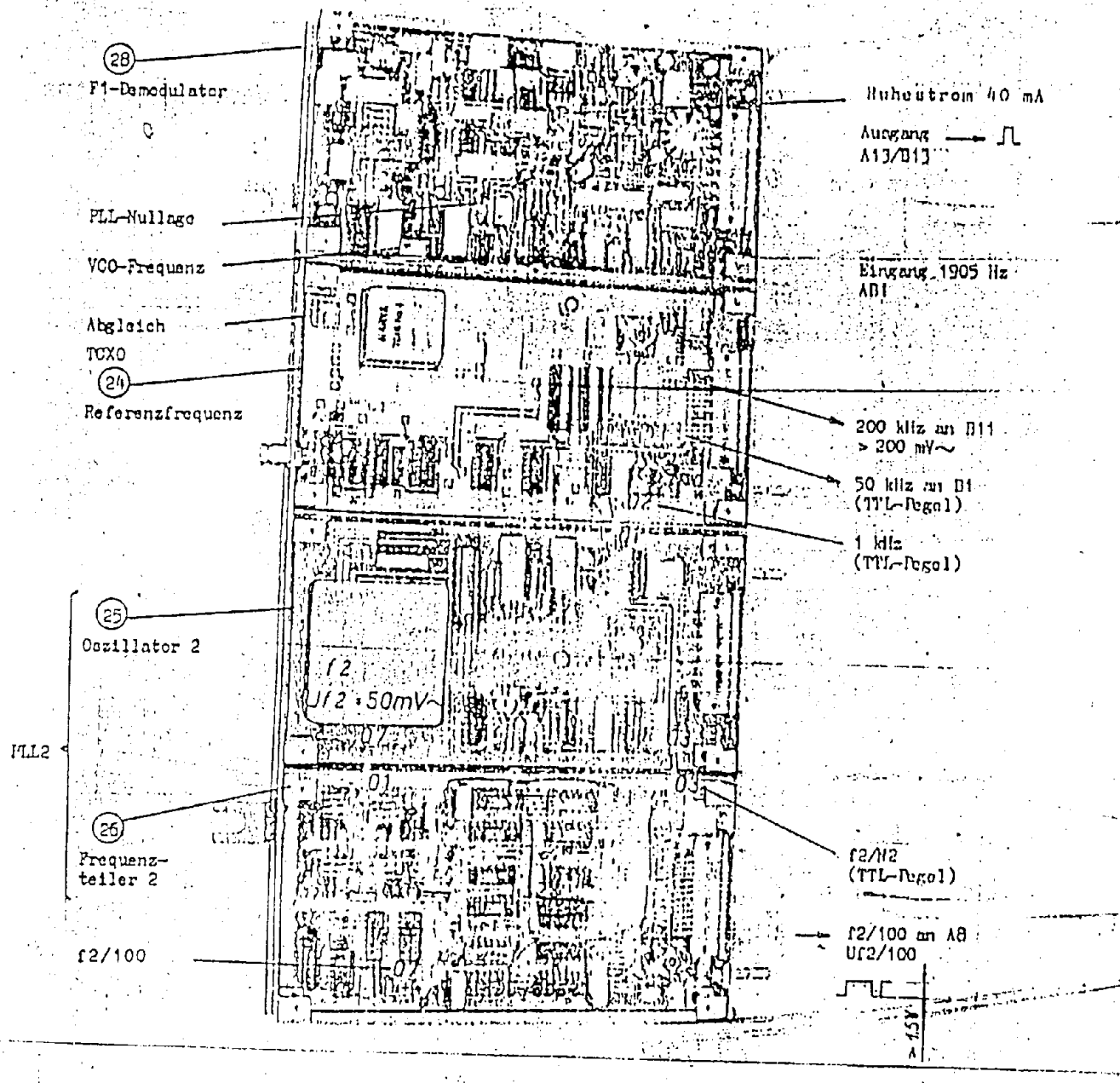

Figure 16 Frequency processing 2 and F1 - Demodulator 1340.041-01221

6.3.7. Phase-lock loop 2 (PLL 2)

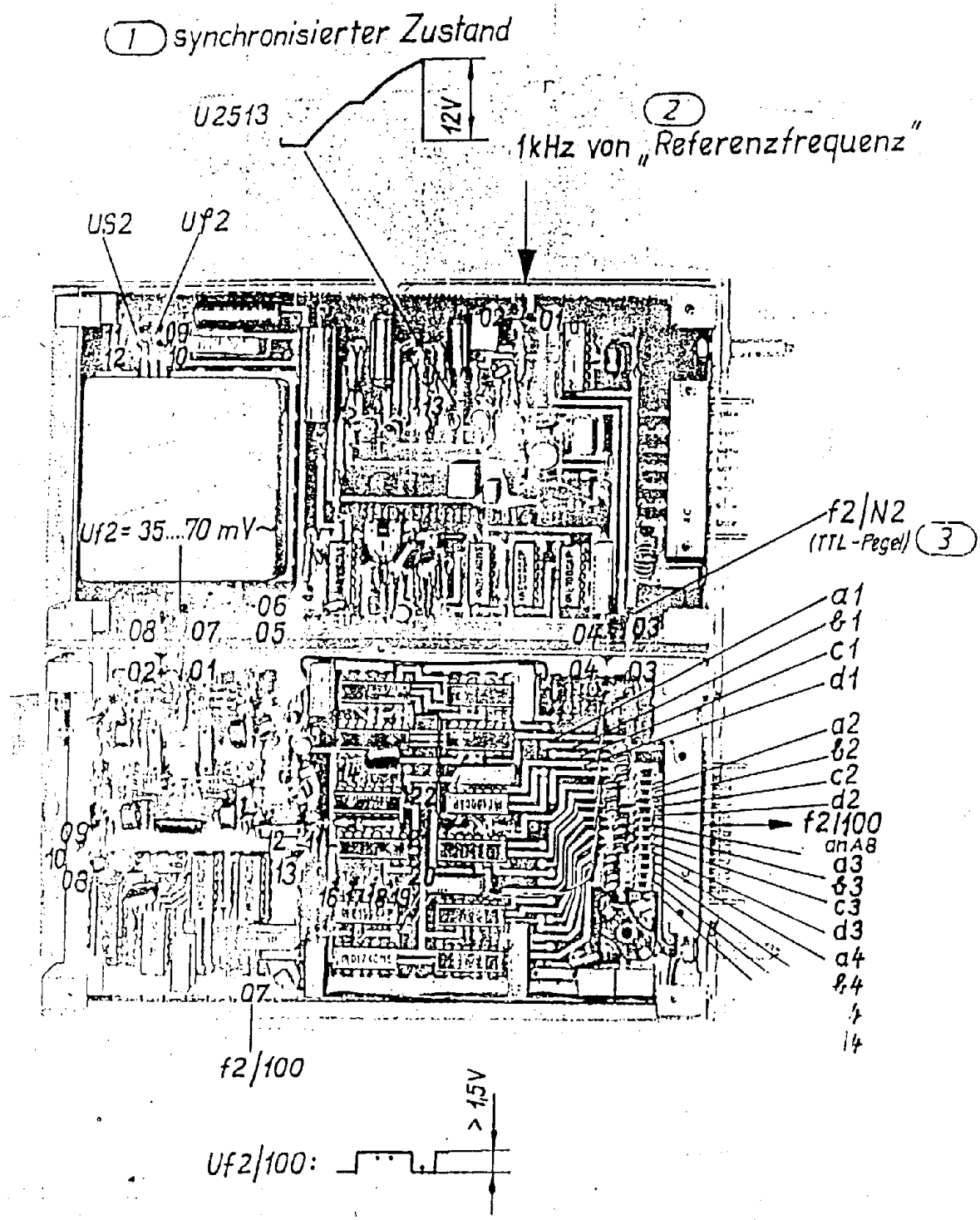

Figure 17

Position of test points PLL 2

1 Prüfprogramm PLL2

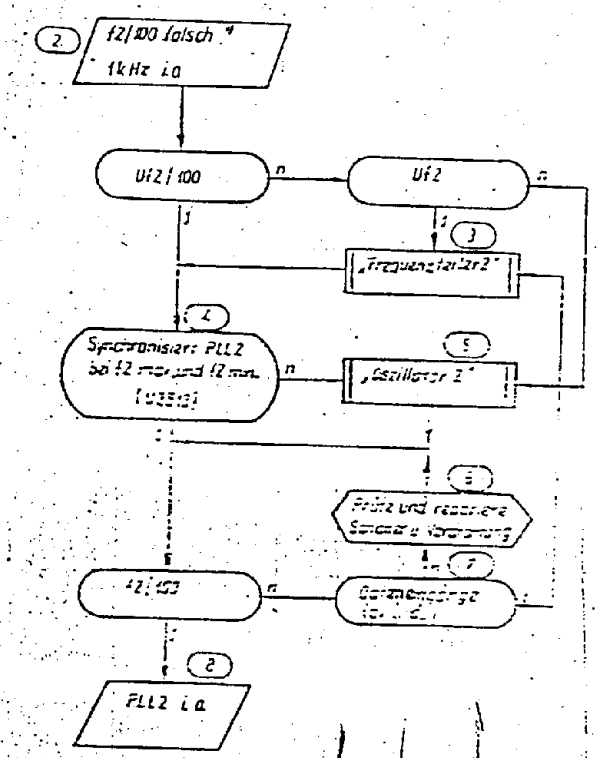

9 falsch: - kein Ausgangsimpuls f2/100
- PLL2 synchronisiert nicht
- PLL2 synchronisiert aber Frequenz ist falsch

10 Blockschaltbild PLL2

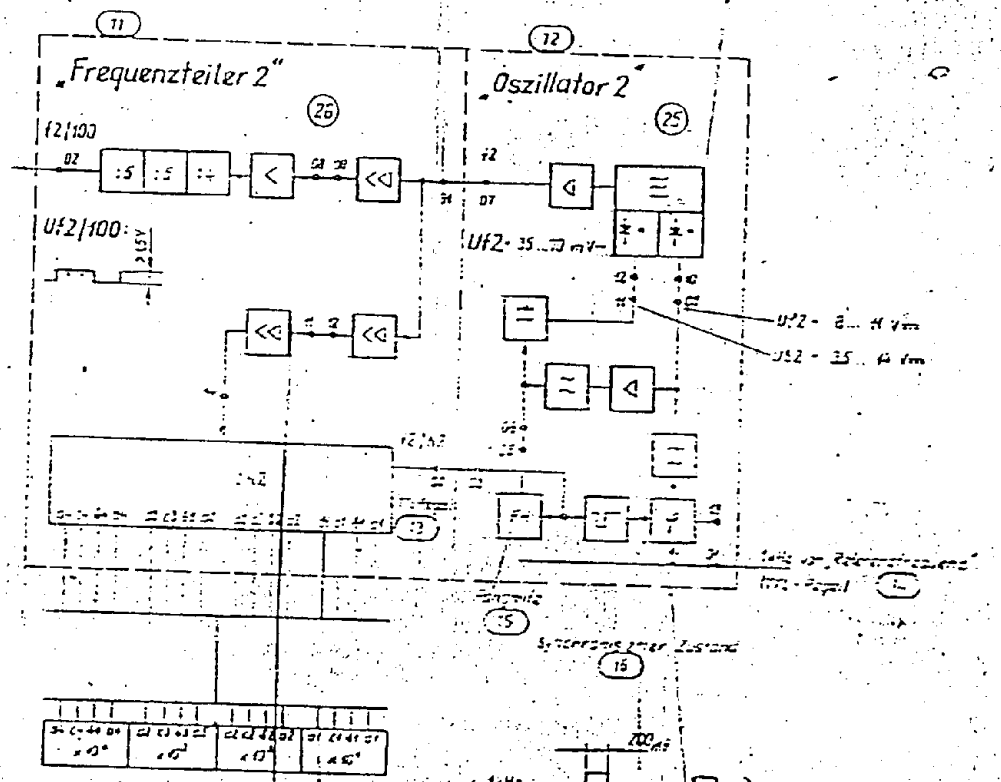

Phasenregelkreis 2 (PLL2)

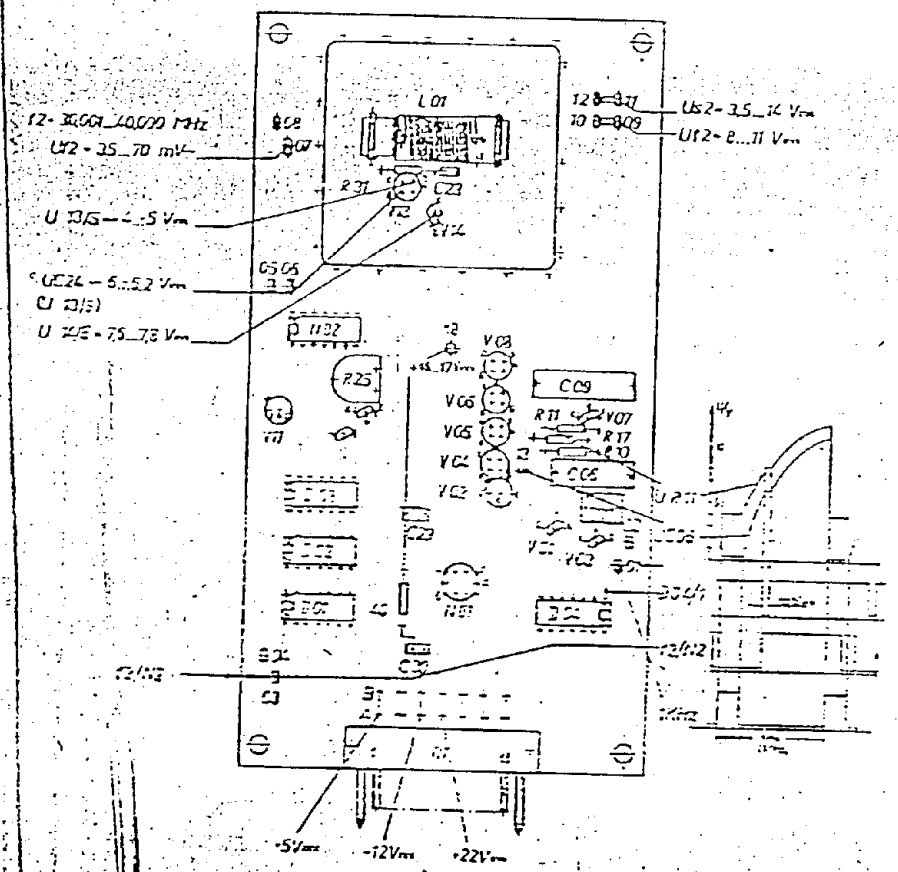

Prüfablauf

Keine Ausgangsspannung f2

1.	-12 V	C30
2.	- 9 V	C29
3.	U f2	(10)
4.	U S2	(12)

(1)

Regelkreis synchronisiert nicht (J1)

1. Betriebsspannungen
2. 1 kHz (Ref) (01)
3. f2/N2 (03)
4. U f2 (10)
5. U_S2 (12)
6. Brücke 11...12 öffnen, an 12 ca. +8 Vss anlegen, mit Frequenzschalter "10 kHz" u. "1 kHz" synchronisieren
7. Funktion und ALC überprüfen
8. Abgleich Phasendiskriminator

No output voltage f2

1.	-12 V	C30
2.	-9 V	C29
3.	U 2	(10)
4.	US2	(12)

1

1. Operating voltages
2. 1 kHz (ref) (01)
3. f2/N2 (03)
4. U 2 (10)
5. U_S2 (12)
6. Open bridge 11...12, apply approx. +8 V dc to 12, synchronize with frequency switch '10 kHz' and '1 kHz'
7. Check capture aid and N 02
8. Balance phase discriminator

6.4.1.9. Kontrolle "Regelgleichlauf/Kanal A und B, Automatikregelung"

- EKD: F 4 500.00 kHz, MOD 6, B 6, SEL 0, GC 1, df 2.00 kHz
- auf jeweils 1000 Hz-Ton im Kanal A bzw. B abstimmen
- P4-EMK = 2 µV ... 200 mV in 20 dB-Schritten schalten, Meßwert P3 (A) bzw. (B) = -3,5 dBm ... 3,5 dBm, maximale Pegeldifferenz zwischen (A) und (B) ≤ 2 dB

6.4.1.10. Einstellen "Regeleinsatz Regelglied 1" (Mischer 1)

- HF-Generator P4 an Empfängereingang X 3004 (Y), f = 4501 kHz, EMK = 100 µV.
- ZF2 - Übergabepegel an X 3001 mit Millivoltmeter P3 messen (über BNC-T-Stück — Zubehör).
- EKD: F 4 500.00 kHz, MOD 4, B 7, SEL 0, GC 5, ⊿≈Y mit P4 auf ca. 1000 Hz-Ton im Kanal A abstimmen.
- ZF2 - Übergabepegel - Sollwert: 5,5 ± 0,5 mV.
- Auf GC 1 umschalten. Mit R 3836 auf - 12 dB unter den bei GC 5 ⊿≈Y von P3 angezeigten Pegelwert einstellen.

6.4.1.11. Einstellen "Trigger - Regelverstärker"

- HF-Generator P4 an Empfängereingang X 3004 (Y) f_E 4 500.00 kHz, EMK = 1 µV
- EKD: F 4 500.00 kHz, MOD 4, B 7, SEL 0, GC 2, Mit P4 auf ca. 1000 Hz-Ton im Kanal A abstimmen
- mit Digital-Voltmeter P9 Kollektorspannung an V 3826 messen und R 3813 so einstellen, daß U_C = V 3826 auf ca. +18 V springt und diesen Wert beibehält.

Zur Kontrolle: P4-EMK von 30 µV in 10 dB-Schritten schalten. U_C = V 3826 muß kurzzeitig < 1,5 V werden und wieder auf ca. +18 V ansteigen.

Check of the frequency discriminator (capture aid)

D01, D02, D03, V10, V11 and V12

Open bridge 05...06

Open bridge 11...12

Apply approx. +8 V dc to 12 (suitable voltage applied to C14)

fe	f2/N2	D03 Pin 9	D03 Pin 5	05
xxx 9999	> 1 kHz	———	⎍⎍	< 1 V
xxx 0000	< 1 kHz	⎍⎍	———	> 14 V

Check of amplifier N 02

Open bridge 05...06

Open bridge 11...12

Adjust with R 2525

$U_{pin4} >> U_{pin\ 5}$ ⟶ U (11) < 2 V

$U_{pin\ 4} << U_{pin\ 5}$ ⟶ U (11) > 13 V

Balancing the oscillator frequency

After replacing V 2516 or V 2517/19 (KB105B) the frequency range of the oscillator is to be checked. Balancing is performed with additional winding at L 2501-wire 0.6 mm Ø Cul.

Possibilities: 2 turns in equal direction of winding
1 turn " " "
0 " " "
1 turn in opposite direction of winding

fe	f2	U point 12
xxx 0000	40 0000 kHz	< 14 V type 13 V P 8, R_i > 3 MΩ
xxx 9999	30 0001 kHz	> 3.5 V type 4.5 V

x = optional setting put on shielding cap for meas

Balancing the phase discriminator

Adjustment with R 2525

U φ = 8...11 V at point 09 with f_E = xxx 5000

Observe oscillogram at C 2506 and R 2511!

6.3.9. Frequency divider 2

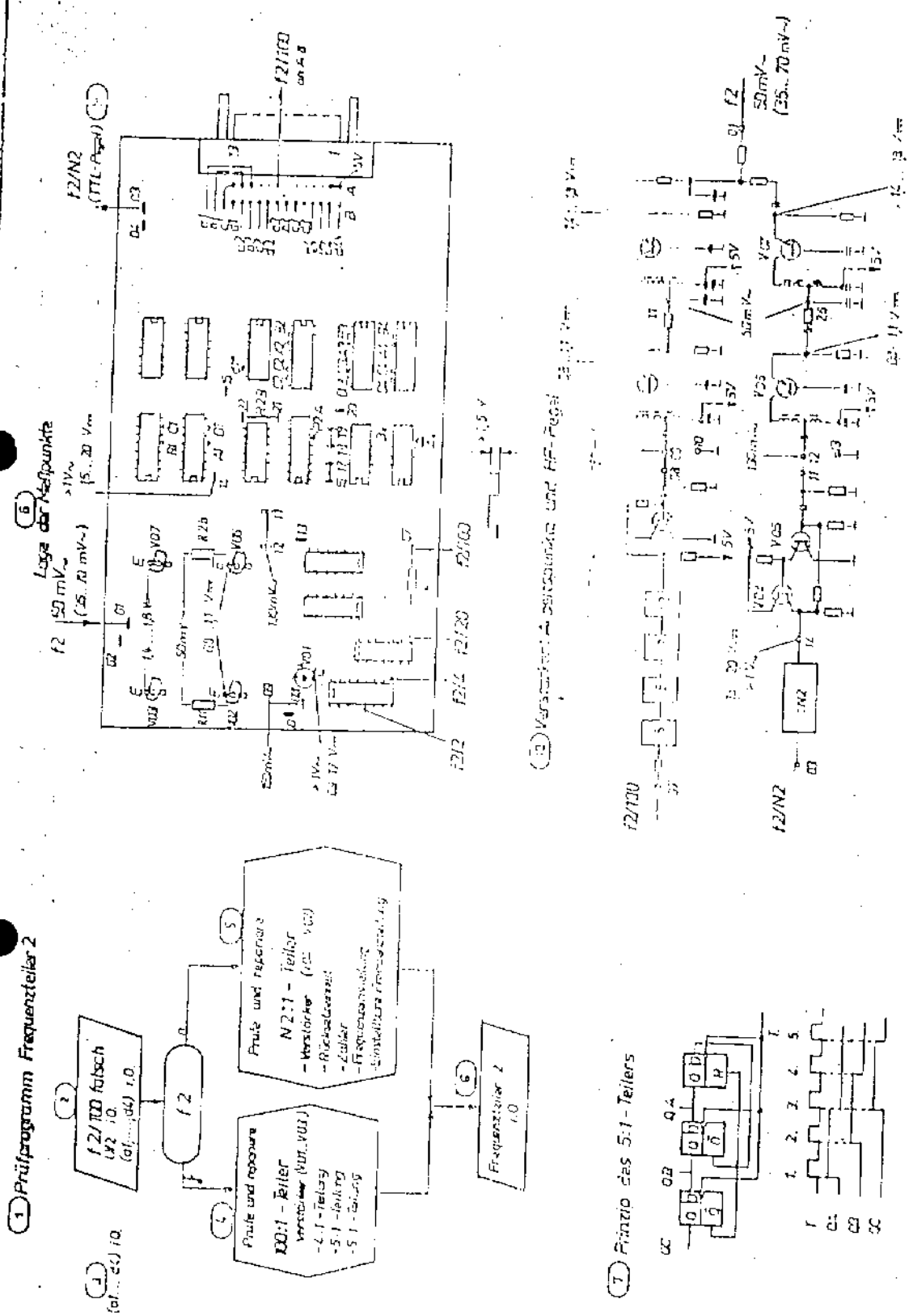

(1) Prüfung des Einstellbaren Frequenzteilers 2

-Rücksetzeinheit (3:1 - Teilung)

Takt an 14

(3) R2A an 00/6

R2B an 21

(2)
- Brücken 16 - 17 verbunden
  18 - 19 offen
  21 - 22 verbunden
  18 - 17 verbunden
- 10 Hz - Schalter auf „T"
- Uf2 - 50 mV~

-Zähler A/B - 40 000

(5)

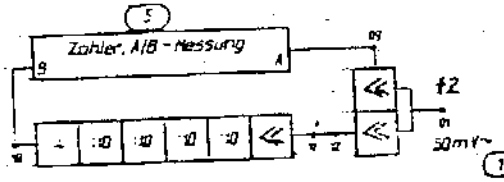

(4)
- Brücken 18 - 17 verbunden
  19 - 19 offen
  21 - 22 verbunden
- Uf2 - 50 mV~

-Frequenzeinstellung

(6)
- Brücken 16 - 17 verbunden
  18 - 19 offen
  21 - 22 verbunden
  16 - 20 verbunden
- Uf2 - 50 mV~

-Einstellbare Frequenzteilung A/B - N2 - 40 000 - (0000...9999)

(7)
- Brücken 16 - 17 verbunden
  18 - 19 verbunden
  21 - 22 verbunden
- Uf2 - 50 mV~.

(8)

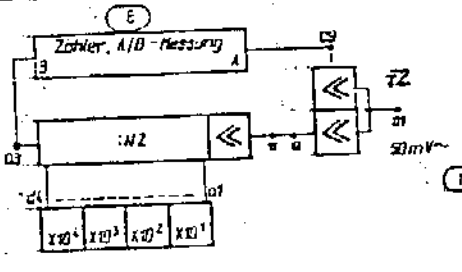

(9) Für die Fehlersuche kann man an Punkt 11 ein Signal mit einem Pegel von ca 150 mV~ und einer Frequenz < 30 kHz einspeisen (P4).

(10) Einstellbarer Frequenzteiler 2

Eingangsfrequenz f2 - 40 000 - (0.000 ... 9999) kHz
Ausgangsfrequenz f2/N2 - 1kHz, im synchronisierten Zustand von PLL 2
Teilerfaktor N2 - 40 000 - N2
Zählanfang N2 - 0000 ...9999. Ziffernwert im 8-4-2-1-Code
Zählende n2 - 40 000
Zählung
- 10 kHz -, 1kHz und 100 Hz - Dekade im 8-4-2-1-Code
- 10 Hz - Dekade und 2 Bit - Einerzähler siehe Tabellen

(11) 10 Hz - Dekade

	d3	d2	d1	d0
0	0	0	0	0
1	0	0	0	1
2	0	0	1	0
3	0	0	1	1
4	0	1	0	0
5	0	1	0	1
6	1	1	1	0
7	1	1	1	1
8	1	0	0	0
9	1	0	0	1

(12) d1 wird umkodiert

(13) 2 Bit - Einerzähler

	d3	d2
0	*	*
1	*	*
2	*	*
3	*	*

(14) Blockschaltbild

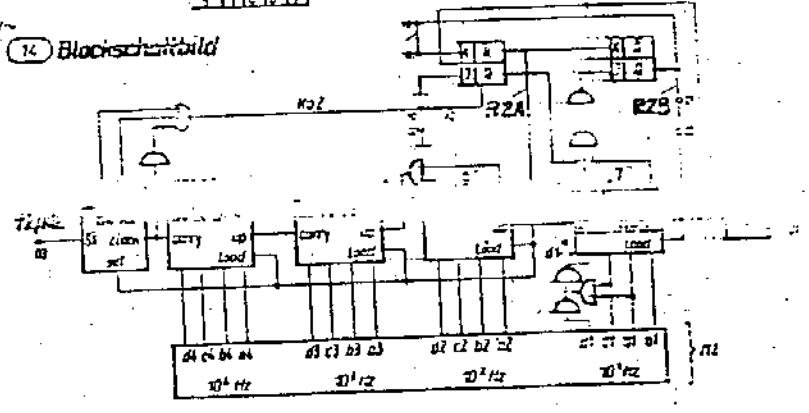

Impulsdiagramm

(15)

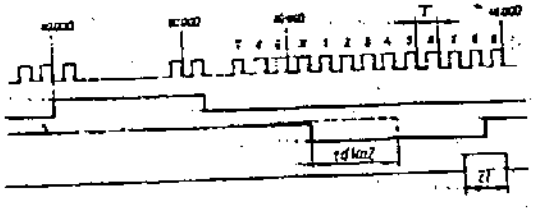

und verfügt

6.4. Signal path

6.4.1. Check or correction of levelling

Open cassette lid (complementation side) of cassettes 'signal path 1' and 'signal path 2' and fasten outer cassettes in hinged position with cassette support (contained in the accessories).

6.4.1.1. Basic amplification 'signal path 1'

- RF generator (P4) to receiver input X 3004 (Y)
  f_E = 4 500 kHz, emf = 1 mV
- RF millivoltmeter P2 (150-mV range) via BNC-T-piece (accessories) at X 3002 (IF2 = 200 kHz)
- EKD: [F] 4 500.00 kHz, [MOD] 4, [B] 5, [SEL] 0, [GC] 5
- Tune with P4 to zero beat (required forward contro)
  Test value P2: 50 to 60 mV
  Correction: 'coarse' with R 3434 / 'fine' with R 3409 } when holding the control volume for 'signal path 1': 60 $^{+2}_{-1}$ dB

6.4.1.2. Control volume 'signal path 1'

- Actual value from point 6.4.1.1. (test value P2) is the reference value
- P4 - emf = 1 V
- Test value P2: Actual value from point 6.4.1.1. $^{+1}_{-2}$ dB
- Correction: with R 3409

6.4.1.3. Mixer - symmetry

- Receiver input X 3004 (Y) not connected
- P2 (500-mV range) to X 3002 (IF2 = 200 kHz) via BNC-T-piece (accessories)
- EKD: [F] 0.00 kHz, [MOD] 4, [B] 5, [SEL] 0, [GC] 5
- Test value P2 ≤ 200 mV
  Correction (minimization): with C 3336 (balancing capacity)

Channel A and B, manual control)

- RF generator P4 to X 0001 (casing) and via connection cable to X 3004 (plug-in).

  f_E = 4 500 kHz, emf = 1 µV

- AF millivoltmeter P3 and load resistance 600 ohm in parallel to line output A (25) and B (26)
- EKD: [F] 4 500.00 kHz, [MOD] 6, [B] 7, [SEL] 0, [GC] 5 ⊄ ≈ ⊤ [df] 2.00 kHz
- Tune with P4 to approx. 1000-Hz tone in channel B, test value P3 (B): +1 dBm, correction with R 3617 *)
- Set 1000-Hz tone with rotary button (2.00-kHz step) in channel A, test value P3 (A): +1 dBm, correction with R 3855 ж) maximum level fault: 0.5 dB.

6.4.1.5. Levelling 'A3E'

- RF generator P4 to receiver input X 3004 (⊤)
  f_E = 4 500 kHz, emf = 5 µV, m = 0.5 f_{mod} = 1 kHz
- AF millivoltmeter P3 in parallel to 600-ohm load resistance at AF line output A (25)
- EKD: [F] 4 500.00 kHz, [MOD] 2, [B] 6, [SEL] 0, [GC] 1
- Tune with P4 1000-Hz tone in channel A to minimum noise
- Balance test value P3 (A) = -1 dBm by means of R 3847 ж)

6.4.1.6. Changing AF line levels (max +6 dBm)

A change of the AF line levels (up to max +6 dBm) is to be carried out with
Channel A: for A3E with R 3847
for A1A, J3E, B8E (+SB) with R 3855 (Demod. and AF)
Channel B: for B8E (-SB) with R 3617 (IF 2/B)

Cf. also Sections 6.4.1.4. and 6.4.1.5.

6.4.1.7. Balancing 'control synchronism/channel A and B, man. con

- RF generator P4, emf = 20 µV
- EKD: [F] 4 500.00 kHz, [MOD] 6, [B] 6, [SEL] 0, [GC] 5
- Tune to 1000-Hz tone in channel A or B
- Adjust test value P3 (B) = 0 dBm with ⊄ ≈
- Adjust test value P 3 (A) = 0 dBm ± 0.5 dB with R 3734
- Switch P4- emf = 2 µV in 20-dB steps and set test value P3 (B) = 0 dBm with ⊄ ≈
- Maximum level difference between (A) and (B): ≦ 1.5 dB

ж) For increased AF output level (e.g. + 6 dBm) balance to a value being 6 dB higher

5.4.1.8. Balancing 'automatic control/channel A and B'

- RF generator P4, emf = 200 mV
- EKD: F 4 500.00 kHz, MOD 6, B 7, SEL 0, GC 1, df 2.00 kHz. Tune with P4 to approx. 1000-Hz tone in channel B, set measuring value P3 (B) = +2 dBm with R 3616
- Set 1000-Hz tone with rotary button (2.00-kHz step) in channel A
- Set test value P3 (A) = +2 dBm with R 3801, max. level fault: 0.5dB
- P4-emf = 2 µV, test values P3 (A) or (B) = -2 dBm ... 0 dBm

5.4.1.9. Check 'control synchronism/channel A and B, automatic control'

- EKD: F 4 500.00 kHz, MOD 6, B 6, SEL 0, GC 1, df 2.00 kHz
- Tune to 1000-Hz tone in channel A or B
- Switch P4 - emf = 2 µV ... 200 mV in 20-dB steps
  test values P3 (A) or (B) = -3.5 dBm ... 3.5 dBm,
  maximum level difference between (A) and (B): ≦ 2 dB

5.4.1.10. Adjustment 'control start/control element 1' (mixer 1)

- RF generator P4 to receiver input X 3004 (Y), f = 4501 kHz, emf = 100 µV
- IF 2 - interposition level on X 3001 to be measured with millivoltmeter P3 (via BNC-T-element → accessories).
- EKD: F 4 500.00 kHz, MOD 4, B 7, SEL 0, GC 5,
  Tune with P4 to approx. 1000 Hz-tone in channel A
- IF 2 - interposition level - rated value : 5.5 ± 0.5 mV
- Switch over to GC 1
- Adjust to a value -12 dB below the one read by P3 for GC 5 with R 3836.

5.4.1.11. Adjustment 'trigger - control amplifier'

- RF generator P4 at receiver input X 3004 (Y)
  f_E 4 500.00 kHz, emf = 1 µV
- EKD: F 4 500.00 kHz, MOD 4, B 7, SEL 0, GC 2
- Tune with P4 to approx. 1000-Hz tone in channel A
- Measure with digital voltmeter P9 collector voltage at V 3826 and adjust R 3813 such that U_C = V 3826 jumps to approx. +18 V and maintains this value.
  For checking: Switch P4 - emf from 30 µV to 1 µV in 10-dB steps. U_C shall decrease for a short time to < 1.5 V and increase then again to approx. +18 V.

Channel A and B manual control

- RF generator P4 to receiver input X 3004 (Y)
  f_E = 4 500 kHz, emf = 30 µV
- EKD: [F] 4 500.00 kHz, [MOD] 4, [B] 7, [SEL] 0, [GC] 1
- Tune with P4 to approx. 1000-Hz tone in channel A
- Measure with digital voltmeter P9 capacitor voltage C 3808 →
- Measure with P9 the voltage at slider of R 3829 and adjust with R 3829 to a value that is 0.5 V below $U_{C\ 3808}$
  (guide value: 4.3 V - 0.5 V = 3.8 V)

6.4.1.13. Balancing 'display E Y '(LED row and decimal digital dis

- RF generator P4 to receiver input X 3004 (Y)
  F_E = 4 500 kHz, emf = 1 mV
- EKD: [F] 4 500.00 kHz, [MOD] 4, [B] 2, [SEL] 0, [GC] 1, TEST 3
  Changeover switch 'LED row' (2) → E Y
- Tune P4 to zero beat (IF forward centre)
- Balance the emf pairs in the sequence 30 µV, 30 mV and 3 µV a 1 V with the assigned preset controllers R 45145 ... R 45148 to the values 'decimal digital display' given in the table below.

	P4 - emf			
	30 µV	30 mV	3 µV	1 V
LED row	30 dB (µV)	90 dB (µV)	10 dB (µV)	120 dB (µV)
Decimal digital display	15 ± 1	45 ± 1	5 ± 1	60 ± 1
Preset controller	R 45145	R 45146	R 45148	R 45147

(Position of preset controller cf. Figure 1)

Note: dB (µV) = dB exceeding 1 µV i.e., 0 dB (µV)

If rated balancing cannot be achieved: change shift register R 45122 (150 kohm ... 220 kohm)

dB (µV) = dB over 1 µV , i.e. 0 dB (µV) = 1 µV

The following section provides hints on troubleshooting in the cassette 'signal path 1'.
For this purpose, the plug-in is to be connected outside the casing via adapter cable (30- and 8-core cable, contained in the accessories).
For fault localization: . dismount cassette lid (complementation side)
. perform level check according to the figure

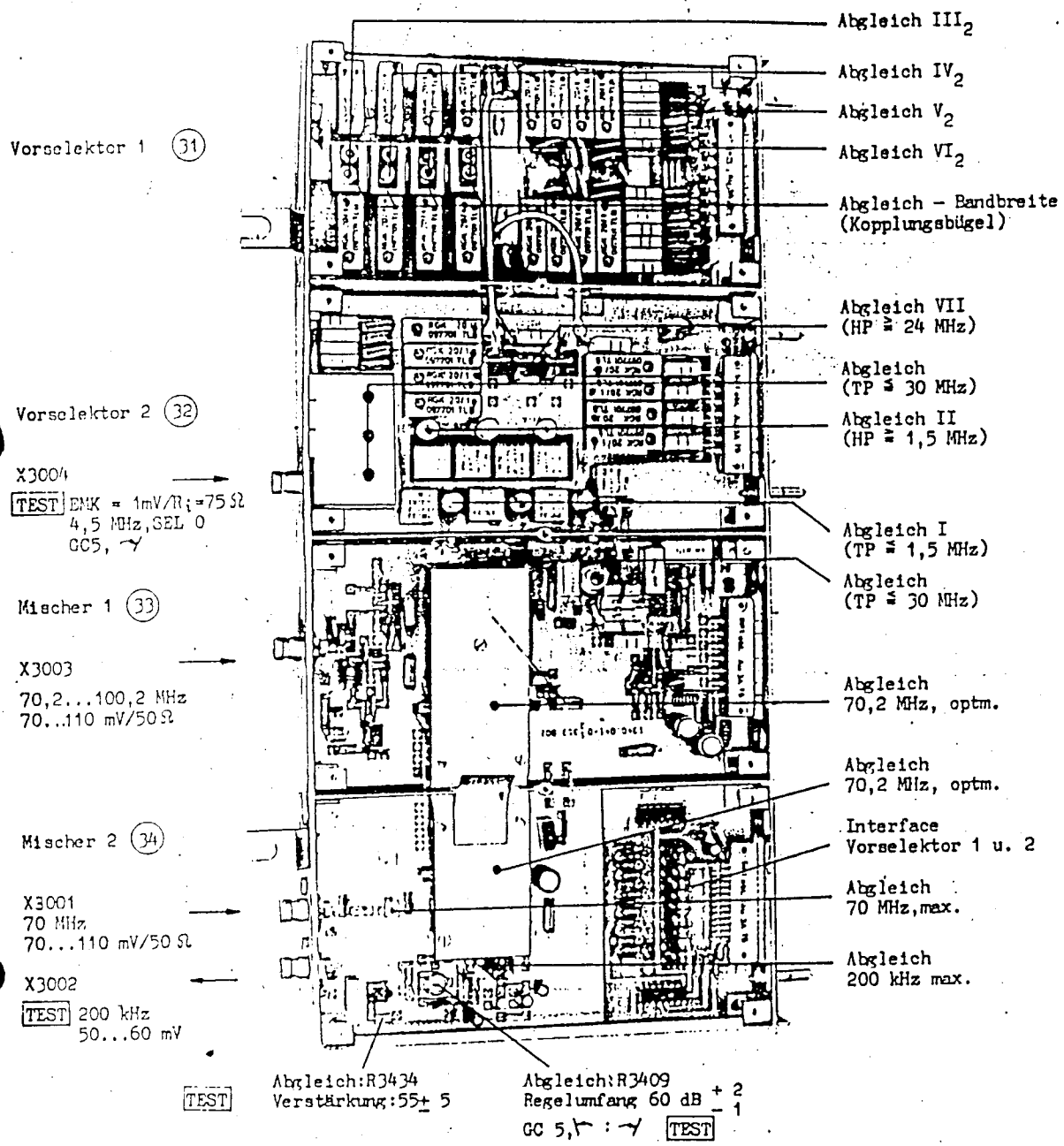

. 86-033 a

Figure 18
Signal path 1 1340.041-01311

Preselector 2, 1340.041-01352

6.4.2.1.1. - Selectivity characteristics 'preselector 1'

(Switchable suboctave filter 1.5 MHz to 24 MHz in 12 subranges)

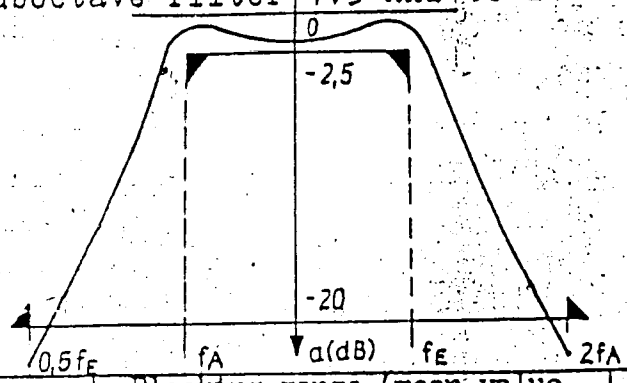

	Pass range (≦ 2 dB) f_A ... f_E(MHz)	Blocking range (mean value ≧ 20 dB) ≦0.5 . f_E(MHz)	≧ 2 . f_A(MHz)	Balancing frequency	Balancing elements
III 1	1.5 ... 2	≦ 1	≧ 3	–	–
III 2	2 ... 2.5	≦ 1.25	≧ 4	2.25 MHz	L3101, L3102
III 3	2.5 ... 3	≦ 1.5	≧ 5	–	–
IV 1	3 ... 4	≦ 2	≧ 6	–	–
IV 2	4 ... 5	≦ 2.5	≧ 8	4.5 MHz	L3103, L3104
IV 3	5 ... 6	≦ 3	≧ 10	–	–
V 1	6 ... 8	≦ 4	≧ 12	–	–
V 2	8 ... 10	≦ 5	≧ 16	9 MHz	L3105, L3106
V 3	10 ... 12	≦ 6	≧ 20	–	–
VI 1	12 ... 16	≦ 8	≧ 24	–	–
VI 2	16 ... 20	≦ 10	≧ 32	18 MHz	L3107, L3108
VI 3	20 ... 24	≦ 12	≧ 40	–	–

Each subrange ends at f_E - 10 Hz

- For all measurements $Z_E = Z_A = 75$ ohm
- Balancing with broad-band wobble measuring set-up (P7)*) between cassette input X 3004 and preselector 2 output P 3205.

*) When balancing with RF generator (P4), attenuate the coil that is not to be balanced with a 300-ohm resistance.

- For balancing: Remove connection to mixer 1 (P 3205 → P 3301) at P 3205: 75-ohm resistance → ⊥

For switching on the subrange to be balanced

EKD: for range III 2: F 2250.00, SEL 1

range IV 2: " 4500.00, " 1

range V 2: " 9000.00, " 1

range VI 2: " 18000.00, " 1

- Coil balancing according to set-point value-selectivity characteristics

  Adjust with strap to insertion loss of ≦ 2.5 dB at the pass-range limits f_A and f_E with adherence to the selection ratings at $0.5 \cdot f_E$ and $2 \cdot f_A$.

- In the other subranges (III 1 ... VI 1 and III 3 ... VI 3): Check insertion loss ≦ 3 dB and selection ratings according to 6.4.2.1.1.

Range I LP ≦ 1.5 MHz

Balancing elements
L 3214
L 3215
L 3216

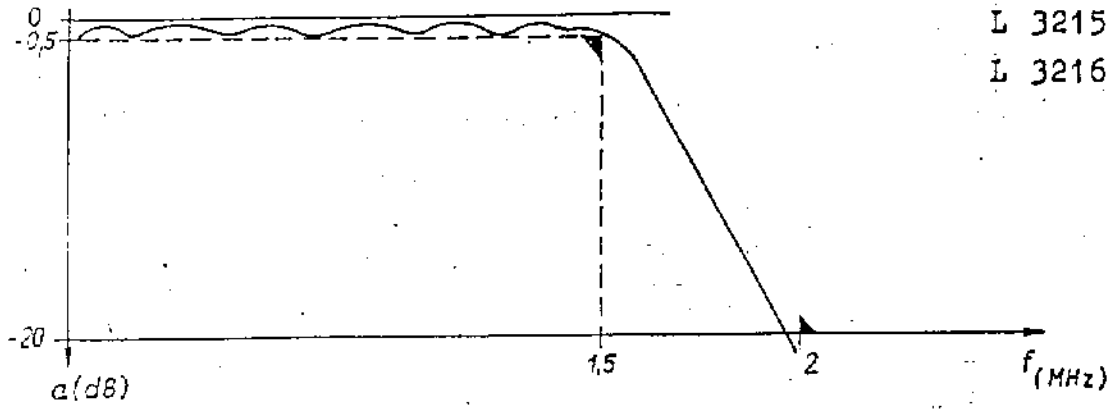

Range II HP ≧ 1.5 MHz LP ≦ 30 MHz

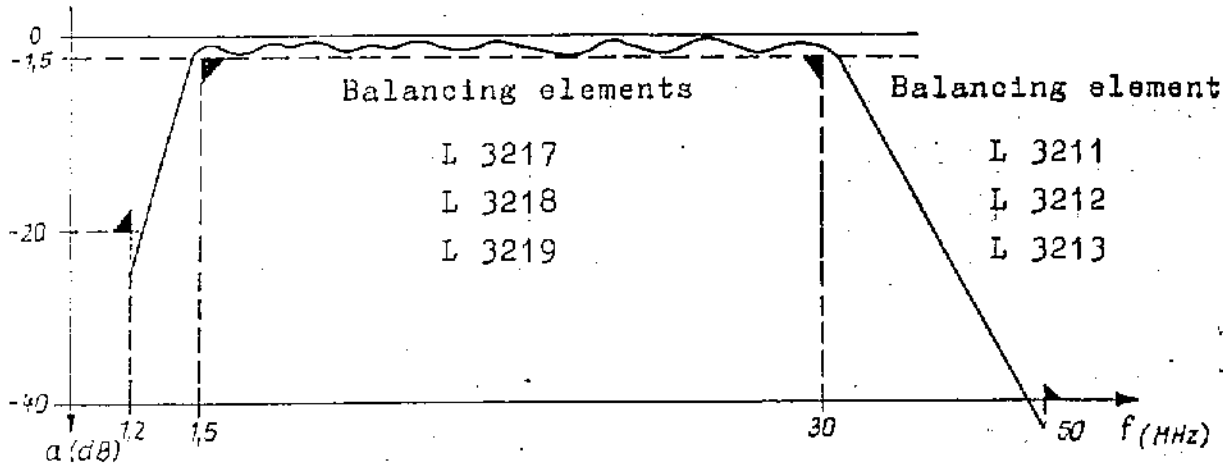

Range VII HP ≧ 24 MHz LP ≦ 30 MHz

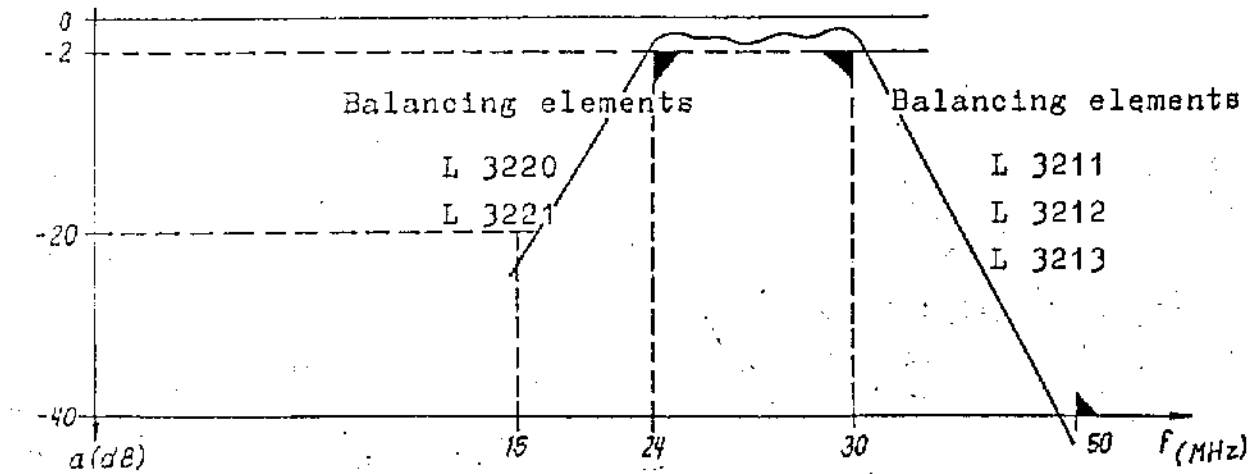

- For all measurements $Z_E = Z_A = 75$ ohm
- Balancing with broad-band wobble measuring set-up (P7) between cassette input X 3004 and preselector 2 – output P 3205
- When balancing: Remove connection to mixer 1 (P 3205 → P 3301) at P 3205: 75-ohm resistance → ⊥
- For balancing the respective preselection range the following operation of the receiver is required:

For range I	: EKD:	F	250.00 kHz,	SEL	1
" II	: EKD:	"	4500.00 kHz,	"	0
" VII	: EKD:	"	26000.00 kHz,	"	1

6.4.3. Signal path 2 1340.041-01321

The following section supplies hints on troubleshooting in the cassette 'signal path 2'.
For this purpose, the plug-in is to be connected outside the casing via adapter cable (30-and 8-core cable, contained in the accessories).

For fault localization:

- Dismount cassette lid (complementation side)
- Apply input signal from RF generator (P4) to X 3051 (input socket for signal path 2)
- Load line output A (25) and line output B (26) at one end ⊥ and with R = 600 ohm to avoid interferences
- Perform level check acc. to figure 19 or 20.

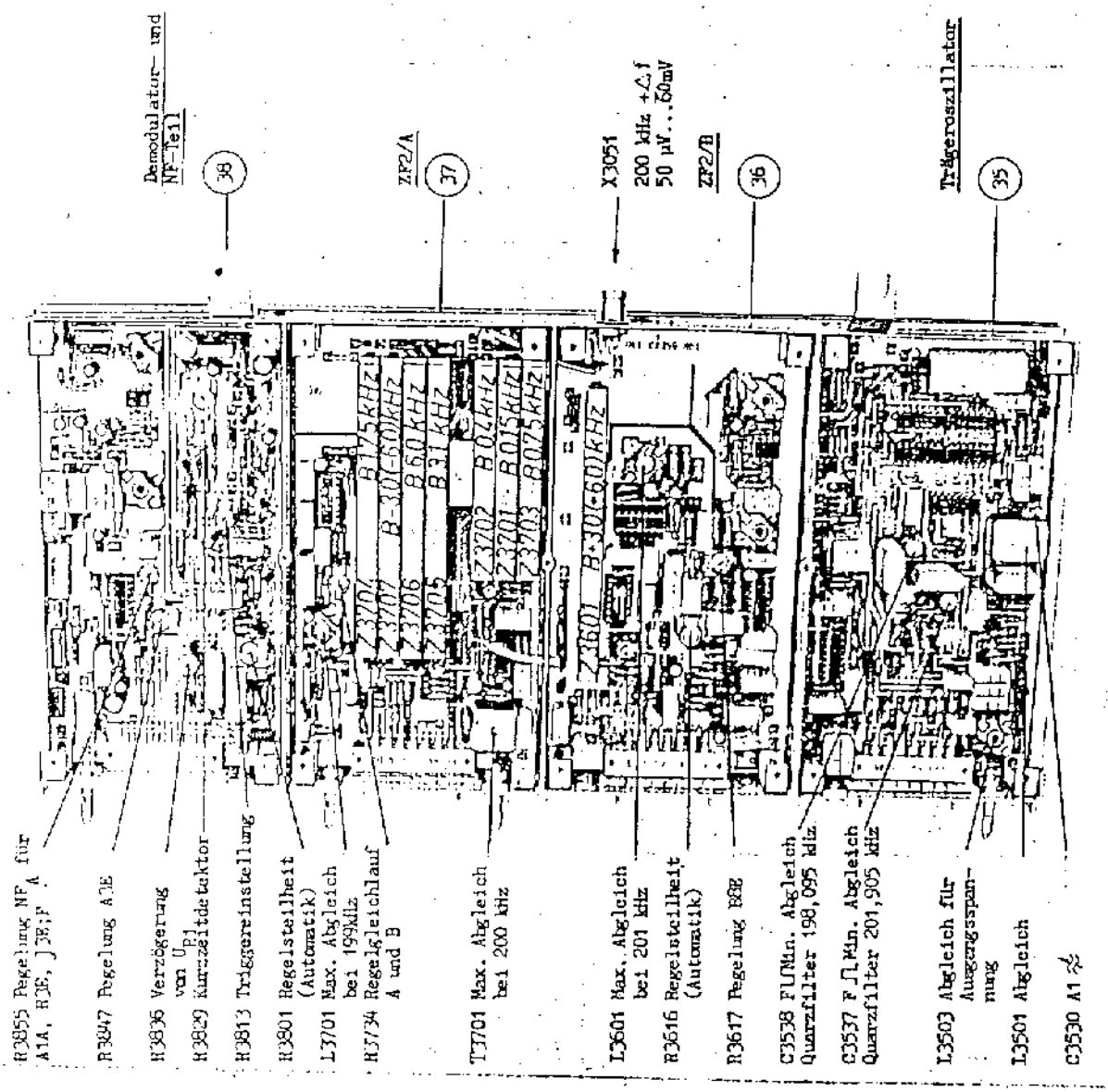

Figure 19

Signal path 2 1340.041-01321

Pegelkontrolle bzw. Pegelkorrektur

	HF-Generator (P4) an X3051		Sendeart	Bandbreite	Verst. Regelung	Prüfung	Prüfpunkt	Meßgröße	
	f	$U_{\sim}$						f	U bzw. $U_{\approx}$
GC 5	–	–	MOD 1	B 6	GC 5	Kontrolle U bzw. $U_{\approx}$	X 3801 /B11	–	≥ 0,75 V – ≤ 0,3 V –
U_{ZF2}-Verst.	199 kHz	55 µV	"	"	GC 5	L 3701 Max.	ZF2 – Ausgang (27)	199 kHz	>100 mV≈
U f_{Tr}-Verst.	200 kHz	10 µV	MOD 3	"	"	T 3701 Max.	ZF2/B P3605 — ⊥	200 kHz	> 30 mV≈
-Kontr.	200 kHz	50 µV	"	"	"	Kontrolle	–	–	L30 leuchtet
Trägeroszillator	–	–	MOD 1			A1	X 3801 /B2	≤ 198,8 kHz ≥ 199,5 kHz	110...160 mV≈
	200 kHz	–	MOD 3	beliebig		Kontrolle f und $U_{\approx}$	"	200,00 kHz	120...170 mV≈
(U f_{Tr}, f_{Tr})	–	–	MOD 4	außer		"	"	200.00 kHz	"
	–	–	MOD 5						
Regelung/A22 $U_{NF(A)}$	201 kHz	55 µV	MOD 4	B 5	GC 5	R 3855 einstellen	NF-Ltgs.-Ausg. A	1 kHz	0 dBm
Regelsteilheit	201 kHz	110 µV	"	"	GC 1	R 3801 einstellen	"	1 kHz	-1 dBm
(Automatik)	201 kHz	25 mV	"	"	"	Kontrolle f, $U_{\approx}$	"		≤ +1,2 dBm
Regeleinsatz U_{R1}	201 kHz	1,5 mV	"	"	"	R 3836 einstellen	X 3801 /B10	1 kHz	12,5 V–
Regelung/A33 $U_{NF(A)}$	200 kHz m=0,5/1 kHz	1 mV	MOD 2	"	"	R 3847 einstellen	NF-Ltgs.-Ausg. A	1 kHz	-1 dBm
Abhörverstärker	201 kHz	1,5 mV	MOD 4	"	GC 5	Kontrolle ☐ ert.	"	1 kHz	≥ 2 V≈an 8 Ohm
Regelung/B68 $U_{NF(B)}$	201 kHz	55 µV	MOD 6	B 7	GC 5	L 3601 Max. R 3617 einstellen	NF-Ltgs.-Ausg. B	1 kHz	0 dBm

Figure 20

o wird verfolgt.

Maximum criteria are value and frequency response of the output voltage U_A as well as the function of the LED V 4602 ⌐‾⌐.

Test and troubleshooting are accomplished in the sequence "Value of the output voltage" - "Frequency of the output voltage".
The tables (figure 21, 22) show, in dependance on the class of emission (MOD) selected, the voltage U of the functional groups or the voltages and frequencies at the inputs U_E, f_E and at the output U_A, f_A ($\hat{=} f_{U3}$) as well as the function of the LED V 4602 ⌐‾⌐.

6.4.3.1.1. Output voltage and control voltage generator

The maximum balancing L 3503 is performed at A1A (very flat maximum) or at F ⊔ alternating with F ⊓ to the equal value of U_A. The crystal oscillator is amplitude-controlled via T 3514.

6.4.3.1.2. Crystal oscillator

The crystal-stabilized oscillator is tuned at its frequency by means of the parallel circuit L 3501-C 3521, C 3530 and the capacity diode V 3529.
The frequency range is balanced at A1A with C 3530 (coarse) and L 3501 (fine) to f_A = 198.8 kHz with 0 V at X 3501/B7 and f_A = 199.5 kHz with 9.5 V at X 3501/B7.
Access to the balancing core of L 3501 is provided after dissoldering of the metal tip in the cap centre. After accomplishing balancing work the coil is to be covered again with the metal tip.

6.4.3.1.3. Store and switch

The switch is actuated by the trigger.
Class of emission R3E, U_E = 200 mV, f_E = 200 kHz $\pm\Delta f_E$.
The switch is closed as V 3523 and V 3526 are blocking and V 3508 or V 3509 cause opening - depending on the potential difference - between emitter and collector thus closing the phase control loop $\Delta f_A = \Delta f_E$.

Class of emission R3E, U_E = 50 mV, f_E = 200 kHz $\pm \Delta f_E$.
The switch is open because V 3508 and V 3509 are blocking via V 352
The phase control loop is open, Δf_A is independent of Δf_E, f_A is nearly constant and changes with -3 Hz/min (discharge of store capacitor C 3518).
In case f_A is dependant on f_E: check V 3523, V 3526, V 3508, and V 3509.
When change of f_A toolarge: replace T 3508, T 3509, T 3510, T 3525, C 3518 in this sequence.
Attention! V 3510 is a MOS transistor, When changing V 3510 or any components which are fed to te transistor terminals these are to be shortened.

In the class of emission J3E, U_E = 200 mV, f_E = 200.000 kHz the operating condition R3E is equal to U_E = 200 mV, f_E = 200.000 kHz. The inverse voltages for V 3523 and V 3526 are firmly switched on via V 3540.

6.4.3.1.4. Phase detector

Direct voltage to N 3501/8 at U_E = 0 : approx. 6 V.
With the control loop closed the voltage at N 3501/8 varies irregularly by approx. $\pm$ 10 % (phase jumps of f_A).

6.4.3.1.5. Voltage path 200.000 kHz

Characteristic of the voltage path: V3501/B3-R3506-V3516-R3503-N3501/14

6.4.3.1.6. Voltage path 200 kHz + Δf_E

Characteristic of the voltage path: V3501-R3508-V3518-C3505-R3503-N3501/14

6.4.3.1.7. Amplifier and trigger

Gate D 3504/9, 10, 11, 8 is included in the amplifier. E 3520 causes slow recharging of C 3517 after having applied the input voltage and with this the delayed response of the trigger (0.5 s) . U_E ≅ 20
V 3504C 15.5 V ⟶ 5 V; V 3503E 3.5 V ⟶ 13.5 V.
V 3521 provokes quick recharging of C 3517 after disconnection of the input voltage and thus immediate response of the trigger.

6.4.3.1.8. Divider 200 kHz/1.905 kHz

Divider ratio 1:105.

In the classes of emission F the divider is put into operation via K input D 3503/10 by applying 2.7 V. The divider consists of the counter components D 3501 and D 3502 as well as of the decoding circuit D 3504 (2 gates) and D 3503 for releasing a reset pulse. Every 103rd pulse at D 3501/14 causes that H potential is applied to the J inputs of D 3503. Thus, the 104th pulse can release a reset pulse at the Q output. This pulse is terminated with the trial edge of the 105th pulse.

6.4.3.1.9. Mixer 200 kHz ± 1.905 kHz

The summation and difference frequencies are available opposite in phase at the outputs N 3502/12 and N 3502/13.
D.C. voltages: N 3502/6.14 approx. 2 V; N 3502/7.9 approx. 3.6 V.
A summation voltage of approx. 400 mV is applied to N 3502/12, 13 (both input- and mixed frequencies).

6.4.3.1.10. Crystal filter 201.905 kHz and 198.095 kHz

Both crystal filters are bridge filters whose branches are activated opposite in phase by N 3502/12 or N 3502/13. After crystal exchange a maximum balance von U_A by minimum tuning of the crystal frequency with C 3535 or C 3536 may be required.
C 3537 and C 3538 provide minimum balancing of the distortion products of U_A (suppression of the undesired frequencies).

...ieser Eigentum
...fältigung dieser
...wird verletzt.

Table

DC voltages of the function groups in dependance of the class of emission selected (MOD)

Test value	Function group		Test point	A1A	A3E	R3E, B_R8E	J3E,B8E	F0,F ⎍	F ⎍
DC voltages of the function groups U (V)	Output amplifier and control voltage generator		X3501/B1	18	18	18	18	18	18
	Crystal oscillator		V3548/K	16.5	0	16.0	16.0	0	0
		A1 pitch control	X3501/B7	0...9.5	0	0	0	0	0
	Store and switch		V3542/K	0	0	16.5	16.5	0	0
	Phase detector		V3519/K	0	0	16.5	16.0	0	0
	Voltage path	200.000 kHz	V3516/K	0	0	0	0.7	0.7	0.7
		200 kHz ± Δ f	V3517/K	0	0	0.7	0	0	0
	Amplifier and trigger		V3546/K	0	0	16.0	(5)	16	16
	Divider 200/11.905 kHz		X3501/A1 D3503/10	5 0	5 0	5 0	5 0	5 2.7	5 2.7
	Mixer 200 kHz ± 1.905 kHz		V3534/K	0	0	0	0	16.5	16.5
	Crystal filter	201.905 kHz	X3501/A9	0	0	0	0	17.5	0
		198.095 kHz	X3501/A11	0	0	0	0	0	17.5

Table

Voltages and frequencies at the inputs and at the output as well as the function of the carrier display in dependance on the class of emission selected (MOD)

Test value		Function group	Connection points	A1A	A3E	R3E, B_H8E	J3E, 28E	F0, F1	F1
Input voltages and frequencies (test)	U_E / f_E	Voltage path 200.000 kHz	X3501/B3 — X3501/A3 ⊥	–	–	–	200 mV 200.00 kHz	200 mV 200.00 kHz	200 mV 200.00 kHz
	U_E / f_E	Voltage path 200 kHz $\pm \Delta f_E$	P3501 — P3502 ⊥	–	–	50mV/200mV / 200kHz+Δf_E $\Delta f_E \leq$ 50Hz	–	–	–
Output voltages and frequencies R_A = 680 ohm	U_A	Output amplifier	X3501/B13 —	110 mV to 160 mV	0	120 to 170 mV	120 to 170 mV	80 to 130 mV W< 5%	80 to 130 mV W< 5 %
	f_A f_{U3}		X3501/A13	< 198.8 to > 199.5 kHz (A1-pitch control)	–	200kHz+Δf_A U_E=200mV Δf_A=Δf_E U_E=50mV Δf_A const. (-3Hz/min)	200.000 kHz f_A=f_E	201.905 kHz	198.095 kHz
Function Carrier display		Trigger	X3501/B11	dark	dark	U_E=200mV lit U_E=50mV dark	dark	dark	dark

Figure 22

6.4.3.2. IF2/A, 1340.041-01357
IF2/B, 1340.041-01356

6.4.3.2.1. Amplification in signal path 2 (X3051 —— P3705)

U_e = 55 µV at X3051 (RF generator P4), GC 5 and ≈

- U_a = 100 mV to 200 mV at P3705 —— ⊥ (millivoltmeter P3)
- U_{R2} = 0.75 V
- Amplification difference with bandwidths B 2... B 4 : ≦ 4 dB
  with B 1 : ≦ 6 dB

Attention Exchange IF2 amplifier circuits N3603 (IF2/B) and N3702 (IF2/A) only in pairs (spare part in B1)

6.4.3.2.2. Carrier amplifier (for R3E and B_R8E)

200 kHz/U_e = 10 µV at X3051 (RF generator P4)

- U_a = 30 mV to 100 mV at P3605 —— ⊥ (millivoltmeter P3)
- 3 dB bandwidth : ≧ ± 50 Hz

6.4.3.2.3. Bandwidth and selection of mechanic filters

B	Rated bandwidth	3 dB bandwidth	60 dB bandwidth
1	0.15 kHz	≧ ± 50 Hz	≦ ± 250 Hz
2	0.4 kHz	≧ ± 150 Hz	≦ ± 500 Hz
3	0.75 kHz	≧ ± 300 Hz	≦ ± 850 Hz
4	1.75 kHz	≧ ± 750 Hz	≦ ± 1250 Hz
5	3.1 kHz	≧ ± 1.5 kHz	≦ ± 2.15 kHz
6	6.0 kHz	≧ ± 3.0 kHz	≦ ± 4.0 kHz
7*)	+3.0 kHz	≧ +(0.25...3.0)kHz	≦ −0.25 kHz; ≦ +3.5 kH
**)	+6.0 kHz	≧ +(0.3...5.9) kHz	≦ −0.3 kHz; ≦ +6.8 kH
8*)	−3.0 kHz	≧ −(0.25...3.0)kHz	≦ +0.25 kHz; ≦ −3.5 k
**)	−6.0 kHz	≧ −(0.3...5.9) kHz	≦ +0.3 kHz; ≦ −6.8 kH
9	signal path blocked		

*) EKD 511
**) EKD 512

Attention The signs of the built-in sideband channel filters are opposite to that of the input signal (sideband commutation in mixer 1).

6.4.3.3. Demodulator and AF section 1340.039-01358

6.4.3.3.1. Demodulator/A1A; J3E; F1B; F3C

Level outline with input signal applied

At P 3801 → ⊥: IF2 signal = 201 kHz or 200 kHz/100 mV, GC 5

At N 3801/14 : $Uf_{carrier}$ (lim.) = 200 mV to 350 mV_{ss}

At N 3801/9 : U_{IF2} = 7 ... 15 mV≈

At N 3801/8 : U_{AF} = 50 ... 55 mV≈

adjust with R 3855

6.4.3.3.2. Demodulator/A3E

Level outline with input signal applied

At P01 → ⊥: IF2 signal = 200 kHz/m = 0.5; 1 kHz, 100 mV, GC 5

At X01/14 : IF2 signal = 3 ... 5 mV≈

At X01/8 : U_{AF} = 50 ... 55 mV≈ ; adjust with R 3847

Attention At input P 3801 → ⊥ : approx. 1.1 V dc voltage

6.4.3.3.3. AF line amplifier 'channel A'

Level outline with input signal applied

At N 3802/3 : U_{AF} = 50 ... 55 mV≈

At N 3802/6 : U_{AF} = 0.775 V≈ (with -52 mV at N 3801/8)

At X 3801/B4 : U_{AF} = 0.775 V≈

Line output 'A' : at X 3802/5 : 8.8 ... 9.2 V ⎓

at X3802/10 : 8.8 ... 9.2 V ⎓

6.4.3.3.4. Monitoring amplifier

U_B at X X 3801: 100 mV (for 0.5 W across 8 ohm X 1021 🔈 external)
(Correcting of amplification possible with R 71.)

Attention Do not generate AF power with the heat radiator disconnected (thermal overload) !

96

6.4.3.3.5. Control amplifier

- Manual control: GC 5
  Generation of U manual control by voltage divider
  R 3845, R 1002 (⊳ ≈) and R 1007

R 1002	→ Mixer 1	→ IF amplification A/B
✋ ⌒	$U_{R1} \geqq 14.5$ V ⎓	$U_{R2} \geqq 0.75$ V ⎓
✋ ⌒	$U_{R1} \leqq 9.5$ V ⎓	$U_{R2} \leqq 0.3$ V ⎓

- Automatic control: GC 1, GC 2

  At P 3801 → ⊥ : $U_{\approx}$ = 100 mV/200 kHz
  At IF output (27): ≧ 100 mV (without load)
  U at $V\ 3821_B$ = approx. 45 mV≈ (adjustable with R 3801)
  Control detector/A : U at $V\ 3824_B$ > +4 V

	Trigger (not driven)	Trigger (driven)
Trigger $V\ 3826_C$	≦ 0.55 V ⎓	>17 V ⎓
Holding circuit $V\ 3827_C$	approx. 1,25 V ⎓	approx. 0.25 V ⎓
Long-time detector $V\ 3828_B$	approx. 0.66 V ⎓	0

$U_{C\ 3808}$ = 3 ... 4 V

Short-time detector $U_{R3829/R3830}$ = 3 ... 4 V ⎓

Amplifier $V\ 3829_B$ = 13 ... 14 V ⎓

Amplifier $V\ 3830_C$ = 12 ... 13 V ⎓

Voltage at slider R 29 = $U_{C\ 3808}$ −0.6 V

6.5. FM demodulator 1340.041-01258

6.5.1. Check 'input signal' (X 2801/A, B1 or X 0002)

Receiver setting: F 0,00 kHz

B 6

MOD 7, 8 or 9

GC 5

Adjust input voltage with control " $\not{\approx}$ " to 0.8 V.

Measure input frequency at MOD 7, 8 and 9
Setpoint value: 1905 Hz ± 1 Hz

6.5.2. Check 'input band-pass' (N 2801)

(P 12 serves as earth reference for all measurements on this pc board.)

Measure 3-dB decrease at P 01 with dF = 0.10 kHz
Pass range approx. 1.1 kHz to 2.7 kHz
Slope steepness approx. 12 dB/oct.
Operating residual attenuation 1.5 dB to 2 dB

6.5.3. Check 'limiter amplifier' (N 2802, V 2804, V 2805)

U_{P02} : approx. V_{rms} at U_e = 500 mV to 2.5 V
(adjust with control $\not{\approx}$)

U_{P03} : approx. 0.8 V_{pp}

6.5.4. Check 'PLL' (N 2803, N 2804, D 2801, V 2806 ... V 2816)

Measure PLL zero position and VCO frequency with the signal path blocked (B 9).

Rebalancing: PLL zero position with R 2826 (0 V ± 5 mV at P04)
VCO frequency with R 2842 (1905 Hz ± 2 Hz at P05)

(Forced changeover with IF bandwidth [B])

100-Bd low pass: at [B] 1, 2, 3 (f_g approx. 150 Hz)

600-Bd low pass: at [B] 4, 5, 6 (f_g approx. 900 Hz)

Offset correction : for 100-Bd low pass with R2867 at P 09
for 600-Bd low pass with R2876 and R2883 at P 08 and P 09

6.5.6. Check 'amplifier' (N 2810)

Measure V = approx. 40 with low Δf (e.g. 80 Hz)
Offset correction with R 2891.

6.5.7. Check 'evaluator circuit' (N 2811)

At centre frequency (1905 Hz) : U_{P11} = 0 V ± 15 mV

At centre frequency $+\Delta f$ = 500 Hz : U_{P11} = + 1 V ± 50 mV

At centre frequency $-\Delta f$ = 500 Hz : U_{P11} = − 1 V ± 50 mV

In case of exceeding U_{P11} values : balance with R 2892

In case of too low U_{P11} values : balance with R 2897

6.5.8. Check 'Line current for teleprinter'

Connect ammeter with 200 ohm (load resistance) in series to teleprinter terminal (X 0008, 3 and 4).

At [MOD] 1 ... 7 : 40 mA ± 5 mA (correction with R 28106)

6.5.9. Check 'holding and capture range of PLL'

Receiver setting:

[F]	0.00 kHz
[dF]	0.01 kHz
[MOD]	8 and 9
[B]	6
[GC]	1

Changeover switch 'LED row' (2) → 'Δfx2'

Holding range: Setpoint value: $\Delta f \cong \pm 900$ Hz referred to centre frequency

Increase frequency with rotary button " ≋ " until luminous point of the LED row jumps from row end to row centre.

Capture range: Setpoint value: $\Delta f \cong \pm 800$ Hz referred to centre frequency

Detune frequency of Δf values 2.00 kHz towards 0.00 kHz by means of rotary button " ≋ ".

Accomplish this function check at MOD 8 and MOD 9.

Check simultaneously the synchronization process through monitoring tone.

100

SERVICE-UNTERLAGE

EMPFÄNGER - TYPREIHE

EKD 500

EKD 511	TYP 1340.42 A1
EKD 512	TYP 1340.42 A2
EKD 514	TYP 1340.42 A4
EKD 515	TYP 1340.42 A5

BAND 2

Hierzu gehört:
SERVICE-UNTERLAGE 1340.042-91700 SU Band 1

Änderungen in Konstruktion und Ausführung, die der technischen Verbesserung und Weiterentwicklung unserer Erzeugnisse dienen, behalten wir uns vor.

Bestellnummer : 1340.042-91700 SU Band 2
Ausgabe 2/1987

665 BkG 011/00762/88

VEB FUNKWERK KÖPENICK
BETRIEB DES VEB KOMBINAT NACHRICHTENELEKTRONIK

DDR · 1170 Berlin, Wendenschloßstr. 142-174

INHALTSVERZEICHNIS

		Seite
EMPFÄNGER EKD 500	1340.042-00001 Fp	5
EINSCHUB	1340.041-10004 Sp Bl.1	6
	1340.041-10004 Sp Bl.2	7
BAUGRUPPENÜBERSICHT	1340.042-00001 Ü	8
GEHÄUSE , VOLLSTÄNDIG	1340.042-01001 Sp	9
GLEICHSTROMWEICHE	1340.042-01022	
STROMVERSORGUNGSTEIL	1340.039.01500 Sp	10
SCHALTREGLER , VOLLSTÄNDIG	1340.039-01552	12
TRANSVERTER	1340.039-01551	
BEDIENEINHEIT	1340.041-01401 Sp	13
STEUERRECHNER	1340.041-01454 Sp	14
	1340.041-01454	15
EIN - AUSGABELOGIK	1340.041-01453 Sp	16
	1340.041-01453	17
TASTATUR , VOLLSTÄNDIG	1340.041-01402 Sp	18
DREHIMPULSGEBER	1340.041-01431 Sp	
TASTATUR , VOLLSTÄNDIG	1340.041-01402	19
ANZEIGE	1340.041-01456 Sp	20
	1340.041-01456	21
STELLSPEICHER	1340.041-01455 Sp Bl.1	22
	1340.041-01455 Sp Bl.2	23
	1340.041-01455	24
	1340.041-01455	25
FREQUENZAUFBEREITUNG 1	1340.041-01211 Sp	27
OSZILLATOR 1	1340.037-01251 Sp	28
	1340.037-01251	29
FREQUENZTEILER 1	1340.037-01252 Sp	30
	1340.037-01252	31
OSZILLATOR 3	1340.039-01253 Sp	32
	1340.039-01253	33

		Seite
FREQUENZAUFBEREITUNG 2 und F1-DEMODULATOR	1340.041-01221 Sp	35
OSZILLATOR 2	1340.037-01255 Sp	36
	1340.037-01255	37
FREQUENZTEILER 2	1340.037-01256 Sp	38
	1340.037-01256	39
REFERENZFREQUENZ	1340.037-01254 Sp	40
	1340.037-01254	41
SIGNALWEG 1	1340.041-01311 Sp	43
VORSELEKTOR 1	1340.037-01351 Sp	44
	1340.037-01351	45
VORSELEKTOR 2	1340.041-01352 Sp	46
	1340.041-01352	47
MISCHER 1	1340.041-01353 Sp	48
	1340.041-01353	49
MISCHER 2	1340.041-01354 Sp	50
	1340.041-01354	51
SIGNALWEG 2	1340.041-01321 Sp	52
	1340.041-01322 Sp	53
TRÄGEROSZILLATOR	1340.037-01355 Sp	54
	1340.037-01355	55
ZF 2 / B	1340.041-01356 Sp	56
	1340.041-01356 / 01366	57
ZF 2 / A	1340.041-01357 Sp	58
	1340.041-01357 / 01367	59
ZF 2 / B	1340.041-01366 Sp	60
ZF 2 / A	1340.041-01367 Sp	61
DEMODULATOR und NF-TEIL	1340.039-01358 Sp	62
	1340.039-01358	63
F1-DEMODULATOR	1340.041-01258 Sp	64
	1340.041-01258	65
200 kHz / 1.7 kHz - UMSETZER	1340.041-01257 Sp	66
	1340.041-01257	67

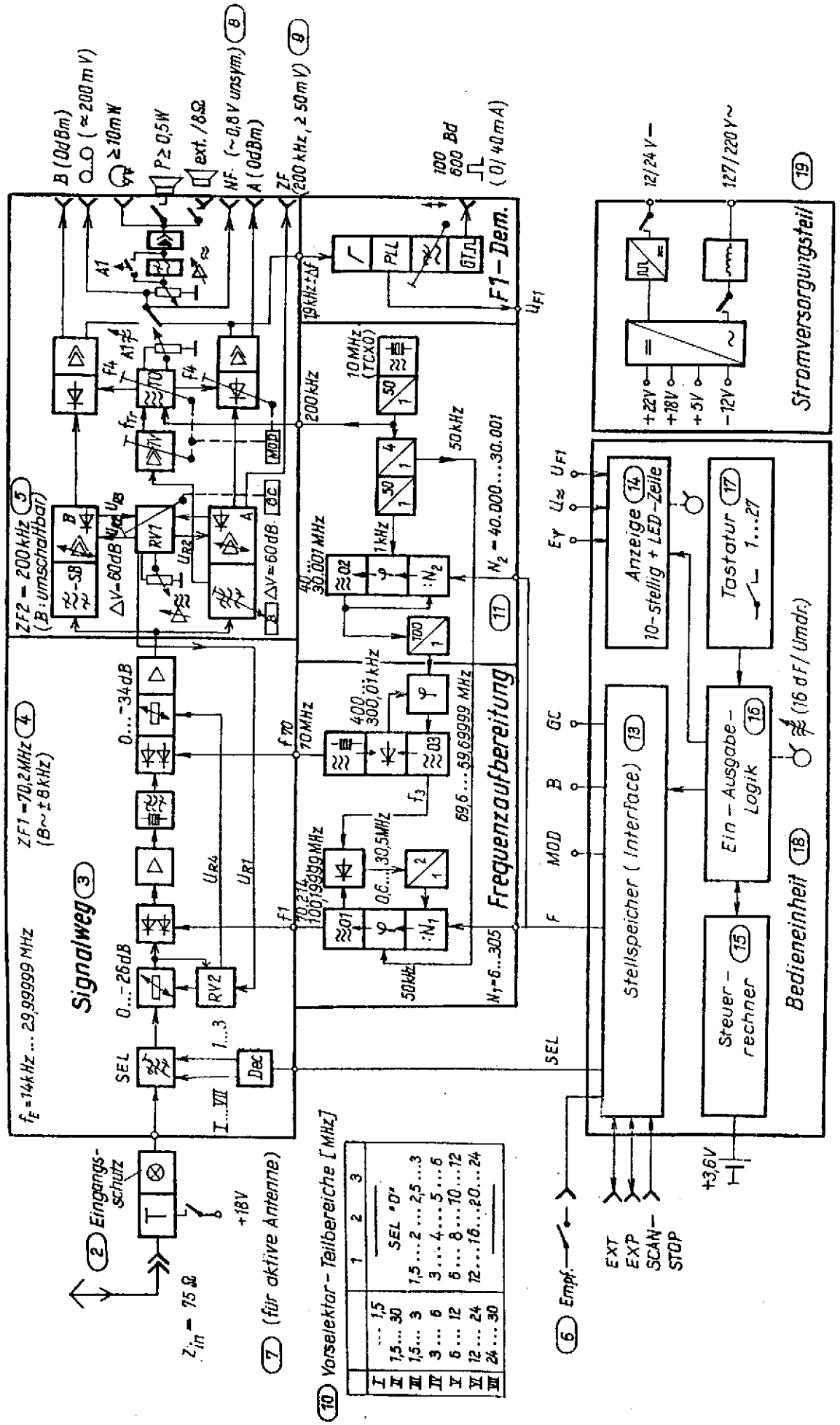

EMPFÄNGER EKD 500
1340.042-00001 Fp

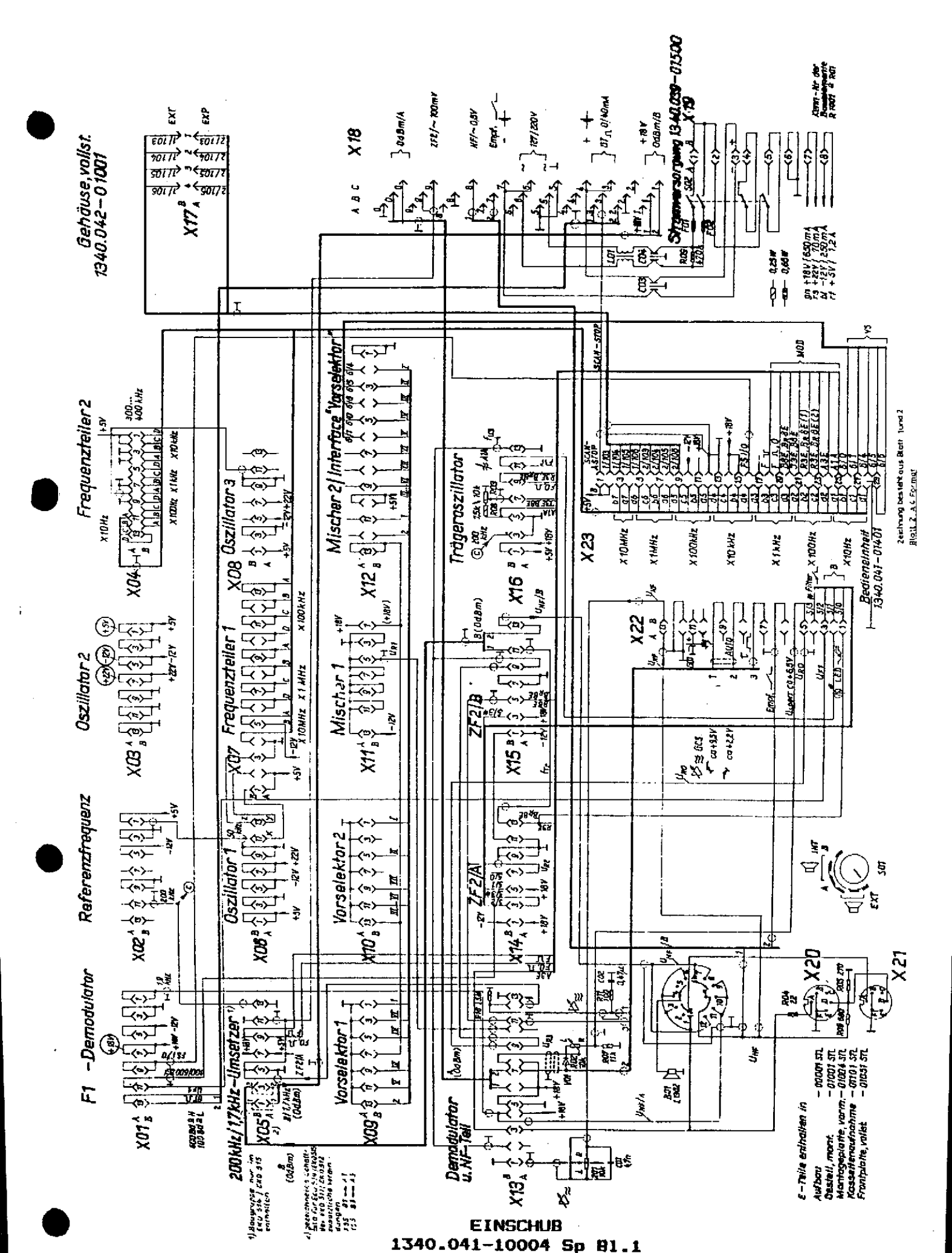
Gehäuse, vollst.
1340.042-01001
Frequenzteiler 2
Oszillator 2
Referenzfrequenz
F1 -Demodulator
200kHz/1,7kHz-Umsetzer
Oszillator 1
Oszillator 3
Frequenzteiler 1
Mischer 2/Interface "Vorselektor"
Mischer 1
Vorselektor 2
Vorselektor 1
Trägeroszillator
ZF2/B
ZF2/A
Demodulator u.NF-Teil
Stromversorgung 1340.039-01500
Bedienteilheft
1340.041-01401
Zeichnung besteht aus Blatt 1 und 2
Blatt 2 A4 Format
EINSCHUB
1340.041-10004 Sp Bl.1

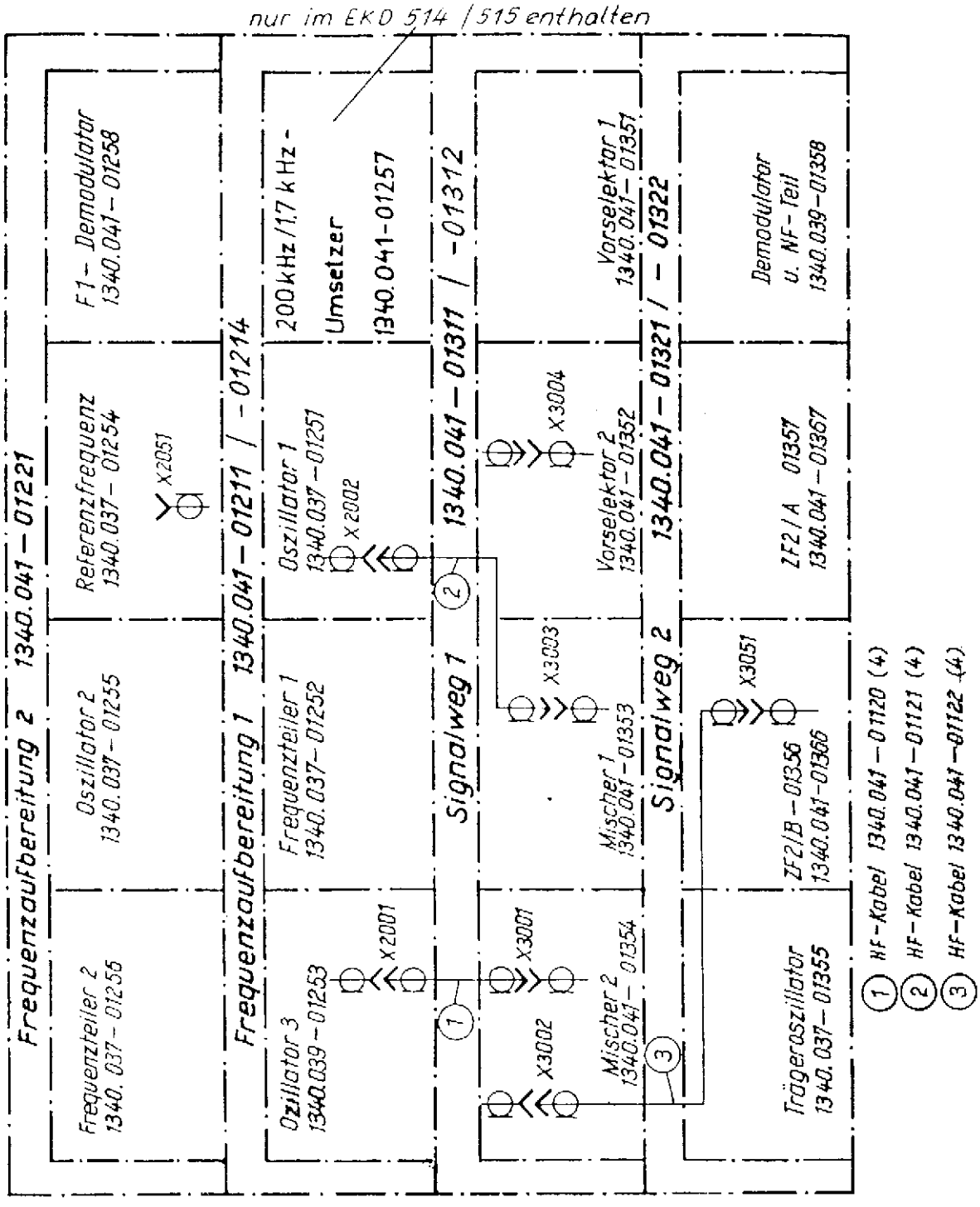

EINSCHUB
1340.041-10004 Sp Bl.2

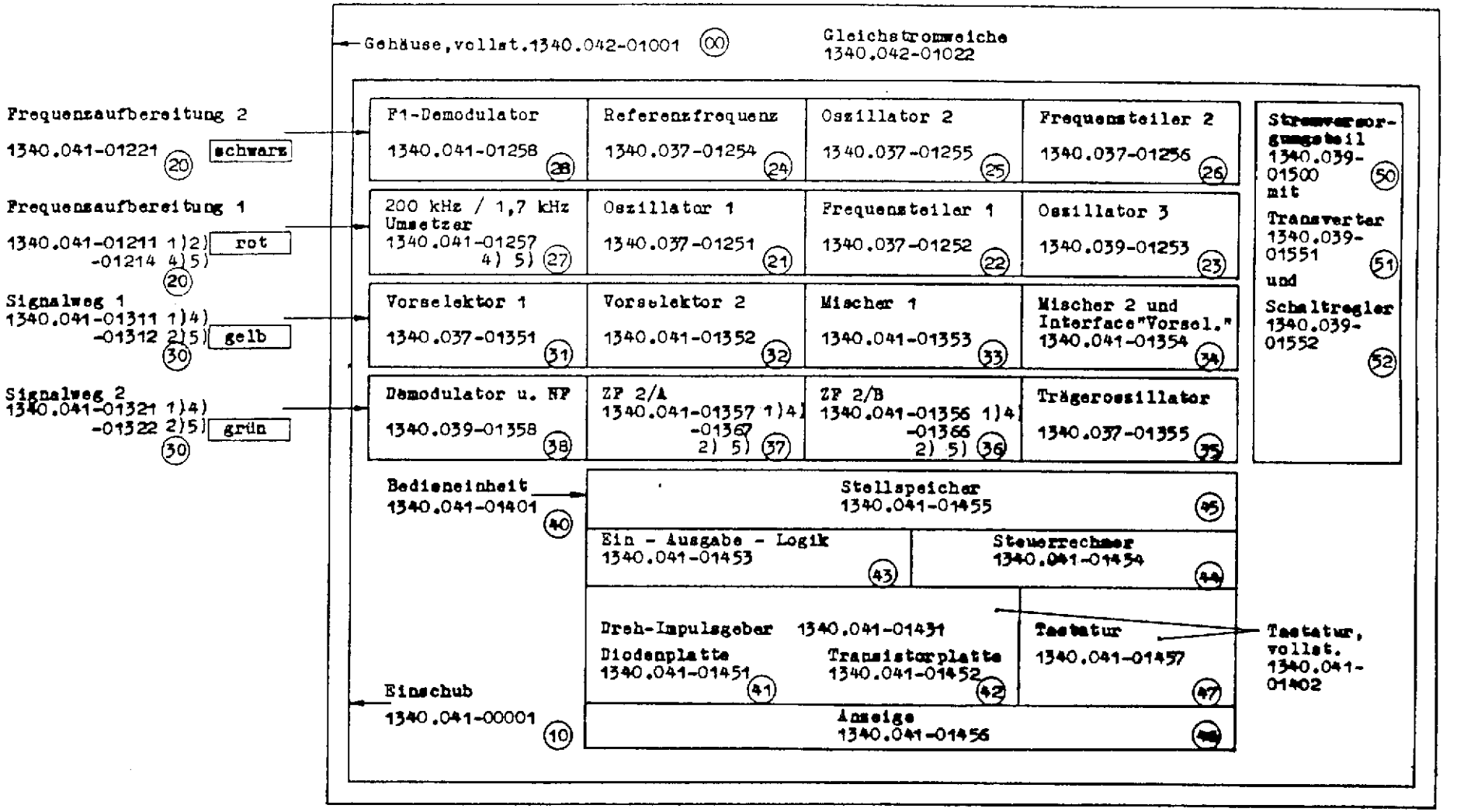

1) EKD 511 : 1340.042-10001

2) EKD 512 : 1340.042-10002

4) EKD 514 : 1340.042-10004

5) EKD 515 : 1340.042-10005

BAUGRUPPENÜBERSICHT
1340.042-00001 Ü

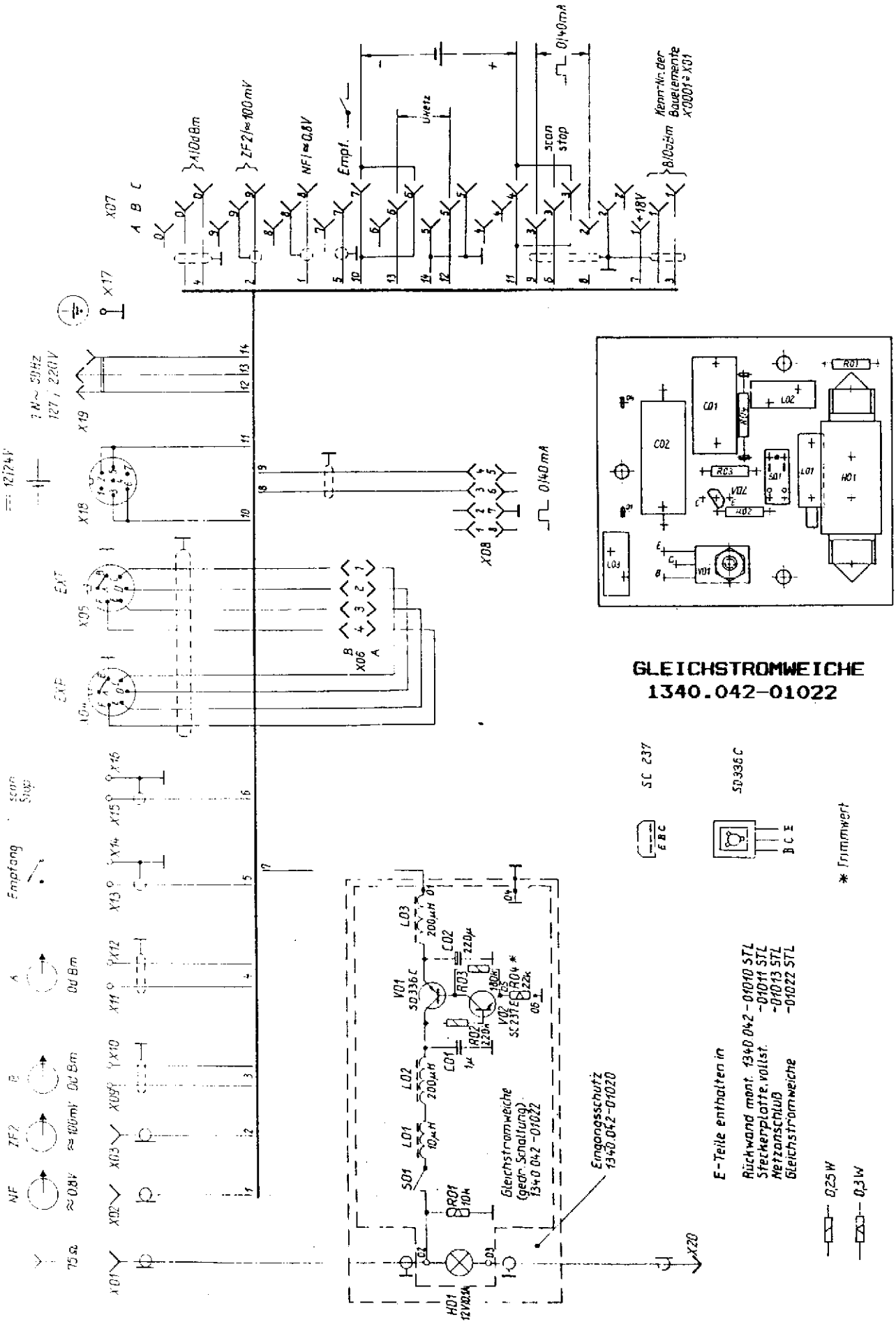
GLEICHSTROMWEICHE
1340.042-01022
GEHÄUSE , VOLLSTÄNDIG
1340.042-01001 Sp
Gleichstromweiche
(gedr. Schaltung)
1340.042-01022
Eingangsschutz
1340.042-01020
E-Teile enthalten in
Rückwand mont. 1340.042-01010 STL
Steckerplatte vollst. -01011 STL
Netzanschluß -01013 STL
Gleichstromweiche -01022 STL
* Trimmwert
SC 237
SD336C
Empfang
Empf.
scan
stop
Uhrtz
0/40mA
Kennzn. der Bauelemente X0001÷X01
+18V
12/24V
1 N~ 50Hz
127 / 220V
EXT
EXF
NF
ZF2
B
A
75Ω
0dBm
≈ 0,8V
≈ 100mV
X01
X02
X03
X09
X10
X11
X12
X13
X14
X15
X16
X17
X18
X19
X20
X05
X06
X07
X08
A B C
E B C
B C E
R01
R02
R03
R04
R05
R06
C01
C02
C03
L01
L02
L03
S01
V01
V02
V03
H01
12V20mA
200µH
10µH
220µ
1µ
10k
120k
180k
22k
0,25W
0,3W

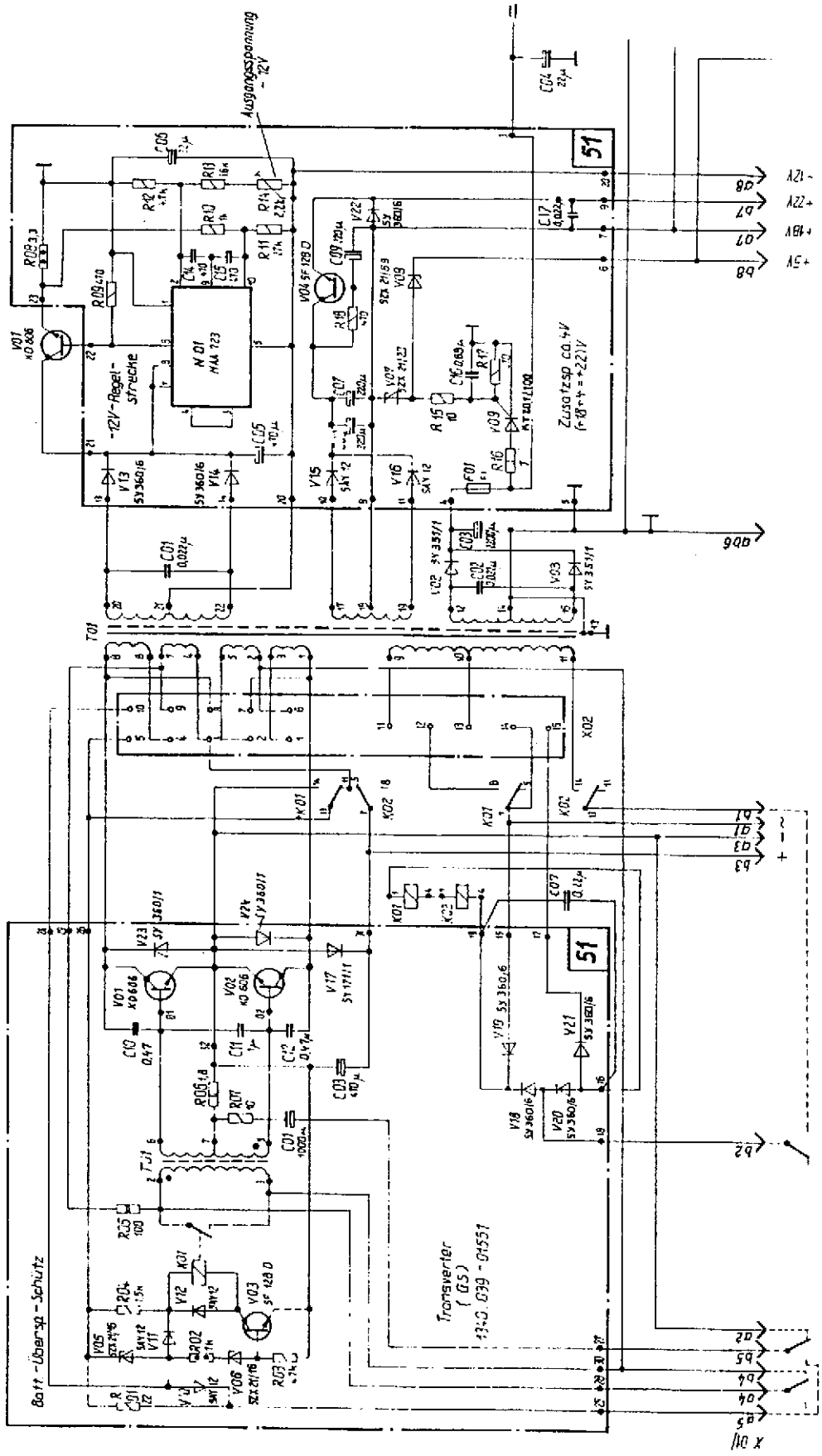

STROMVERSORGUNGSTEIL
1340.039.01500 Sp

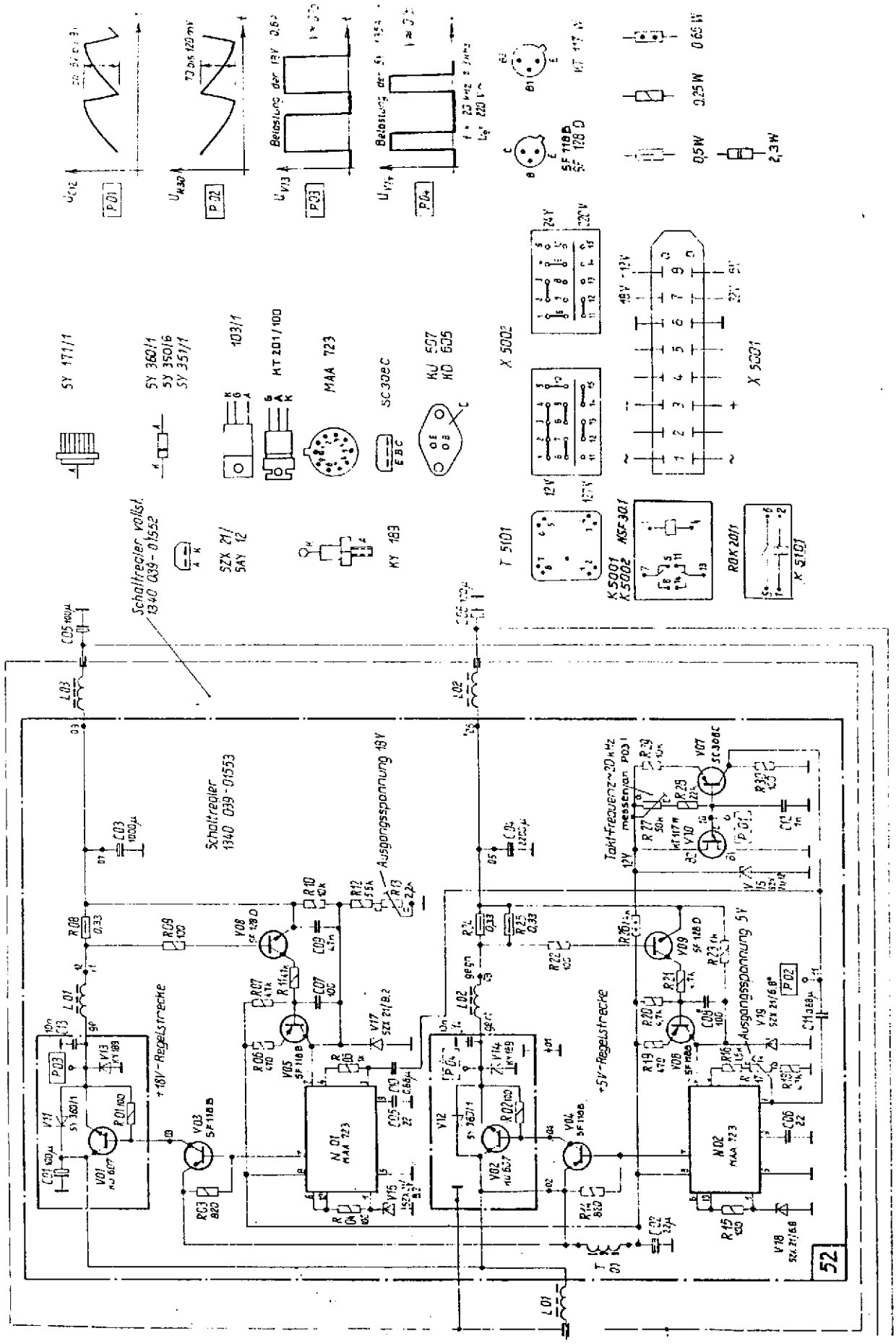

STROMVERSORGUNGSTEIL
1340.039.01500 Sp

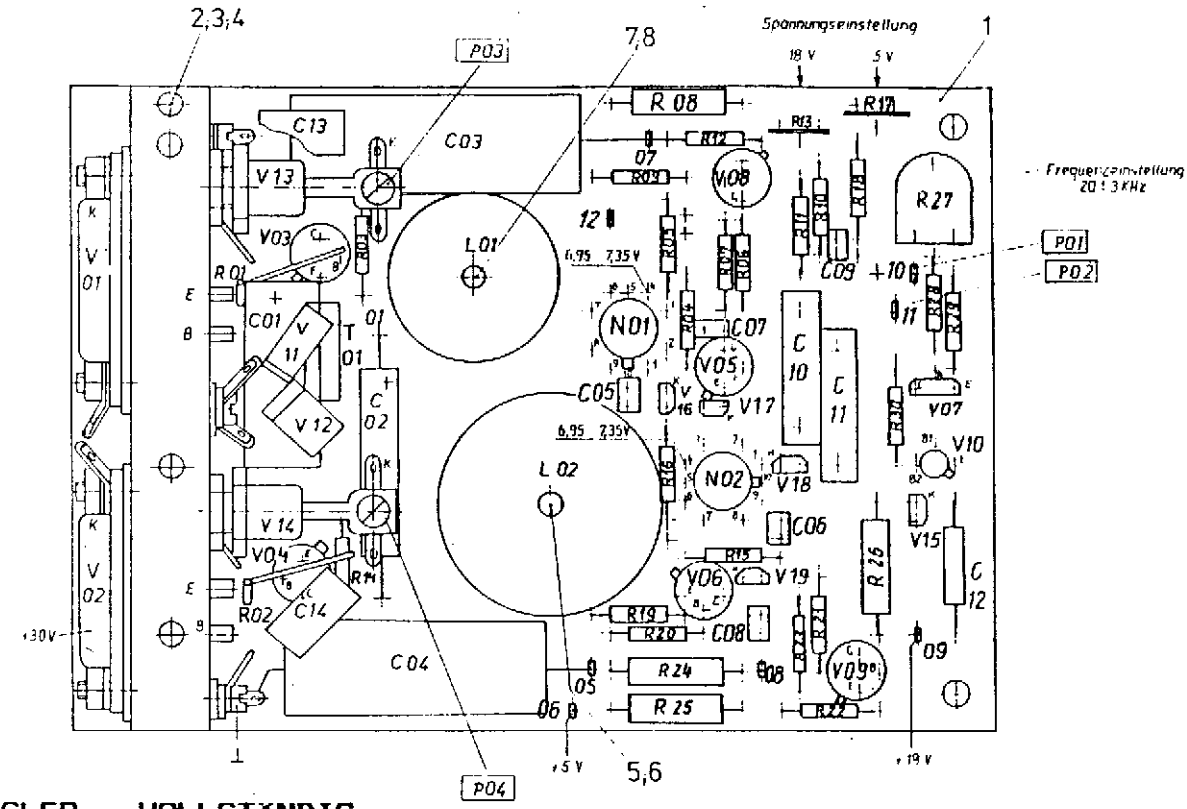

SCHALTREGLER , VOLLSTÄNDIG
1340.039-01552

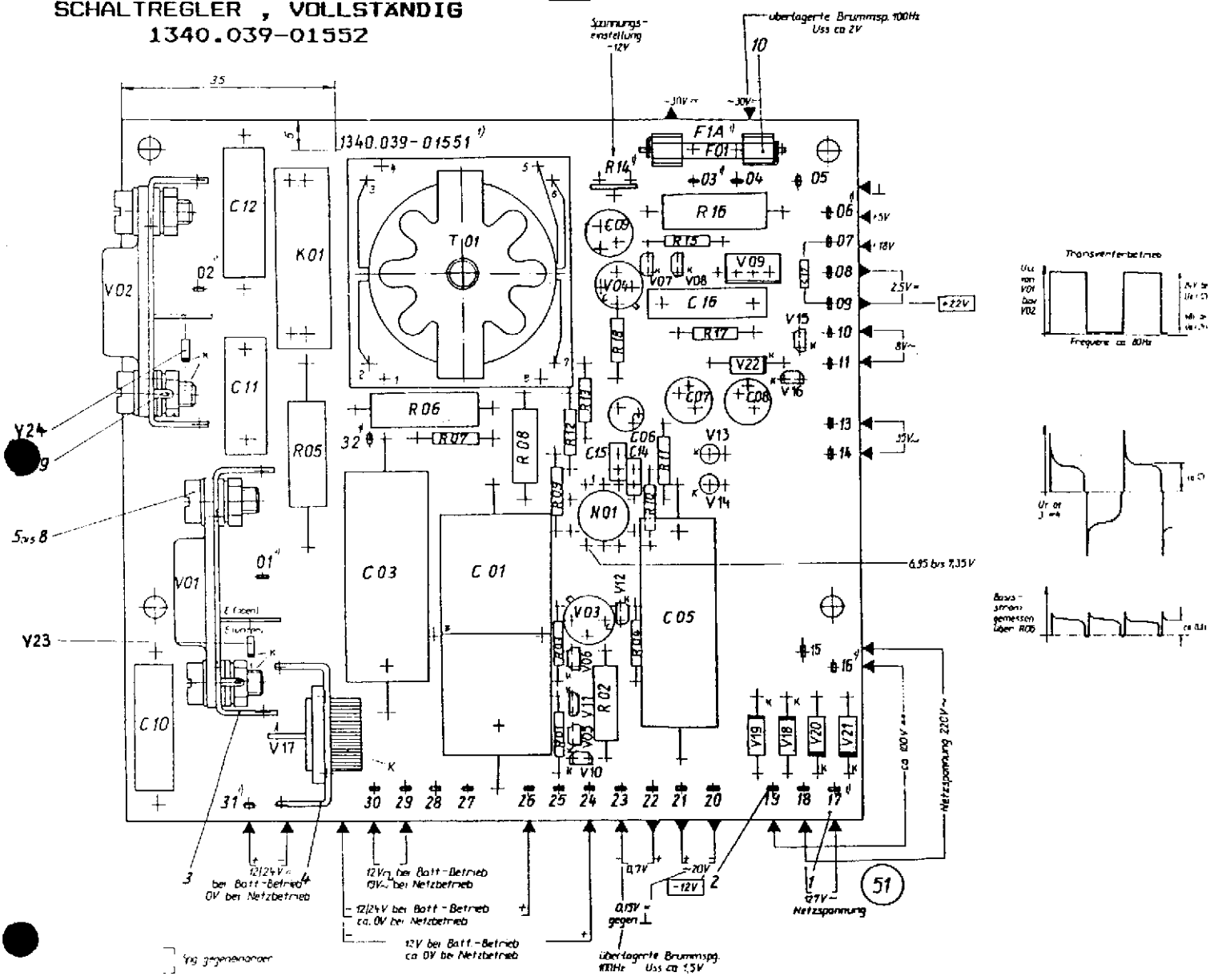

TRANSVERTER
1340.039-01551

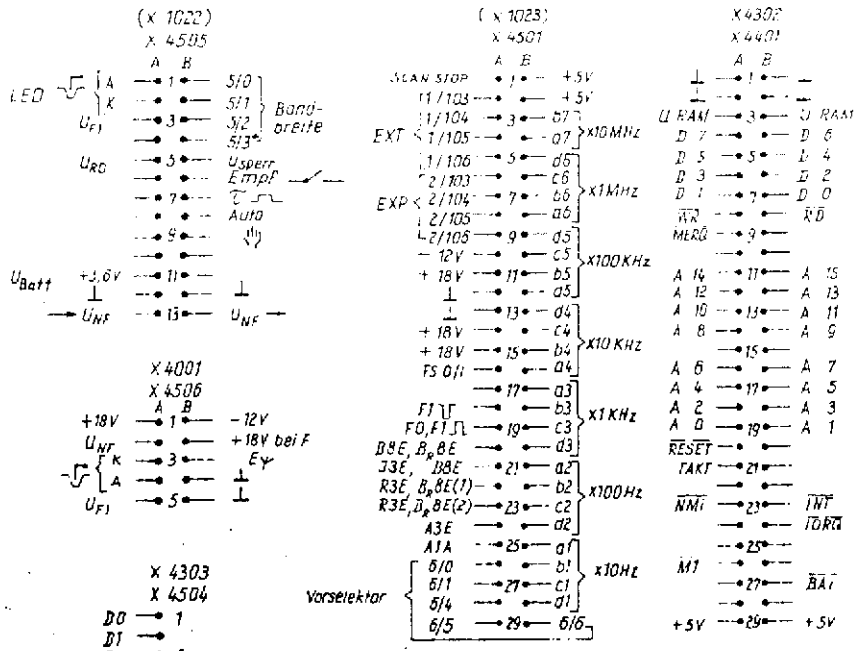

S01	Anzeige
1/7	ΔF ×1
2/8	ΔF ×2
3/9	EΨ
4/10	U_{NF}

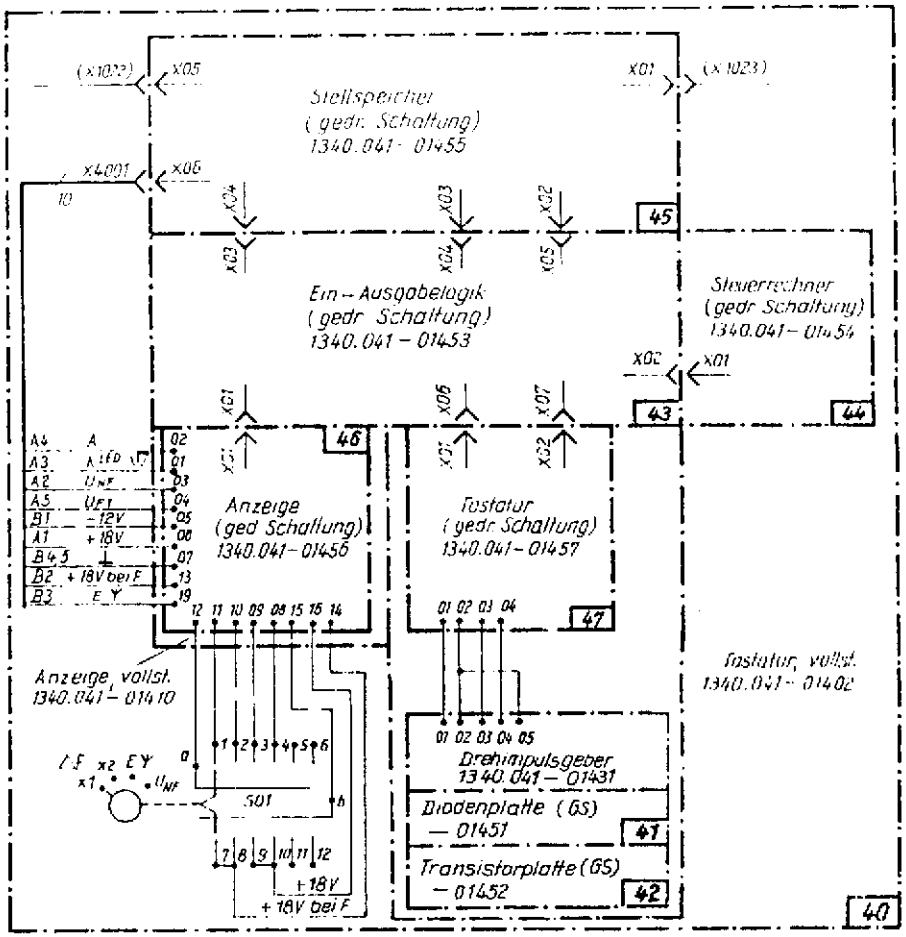

BEDIENEINHEIT
1340.041-01401 Sp

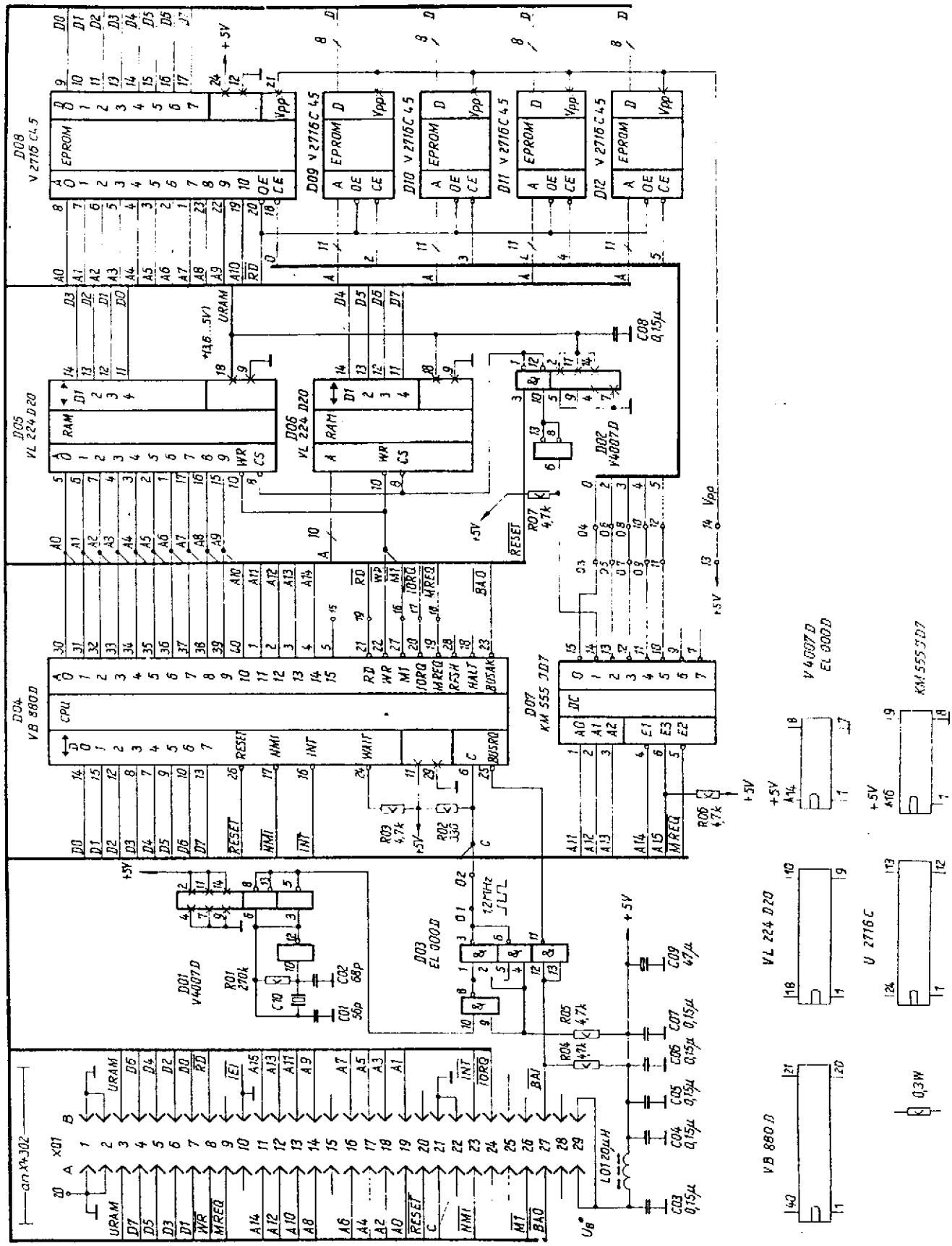

STEUERRECHNER
1340.041-01454 Sp

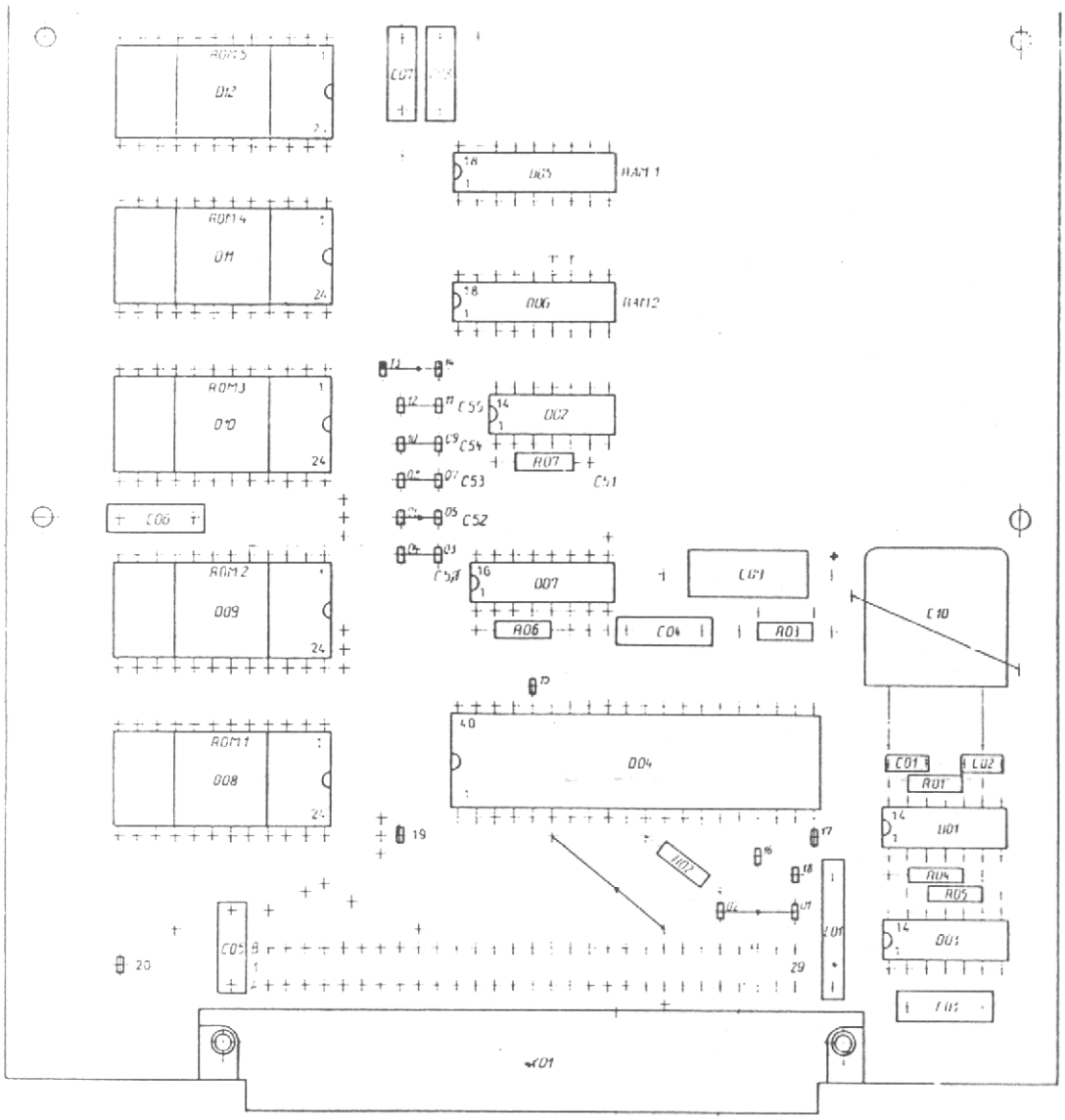

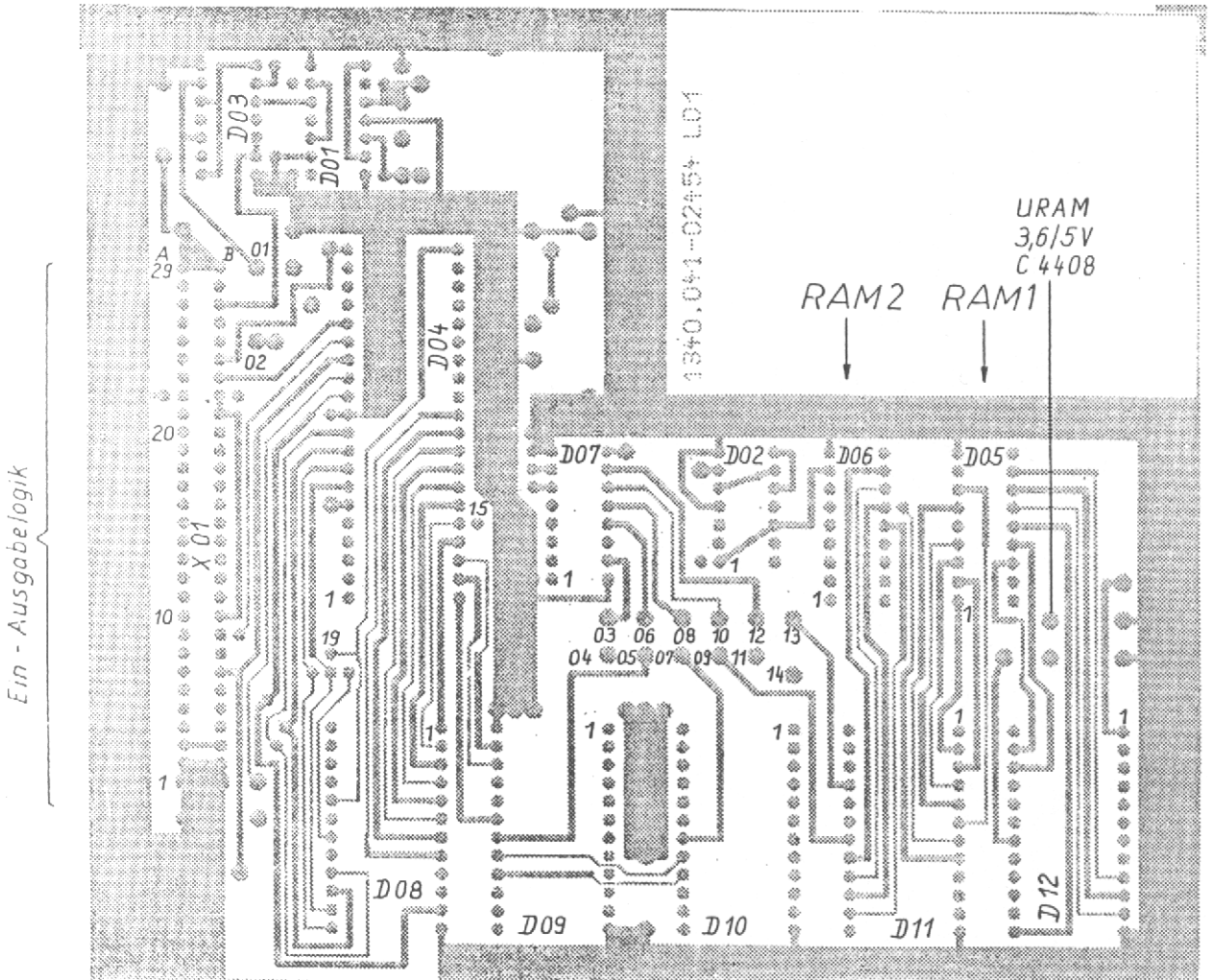

STEUERRECHNER
1340.041-01454

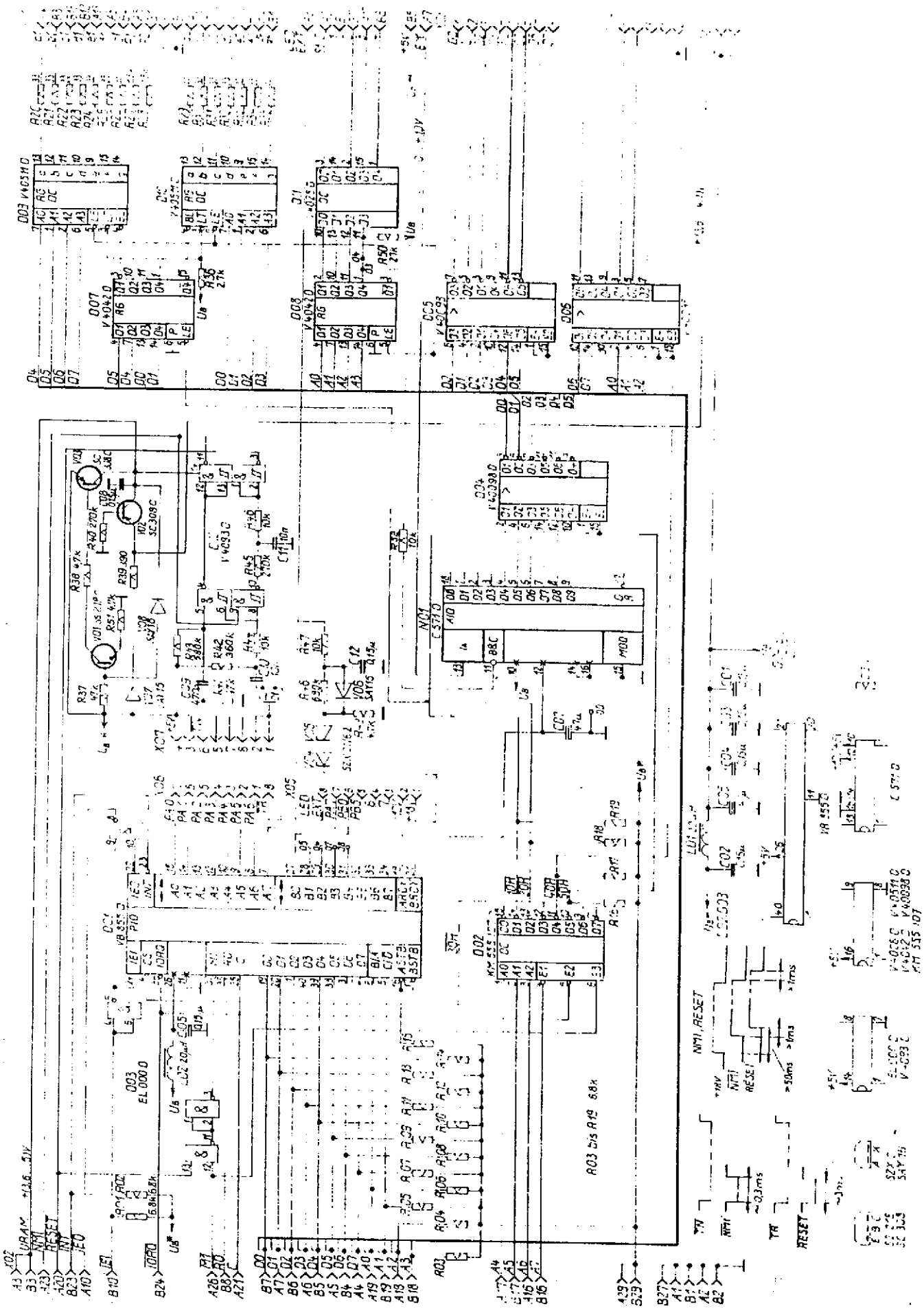

EIN - AUSGABELOGIK
1340.041-01453 Sp

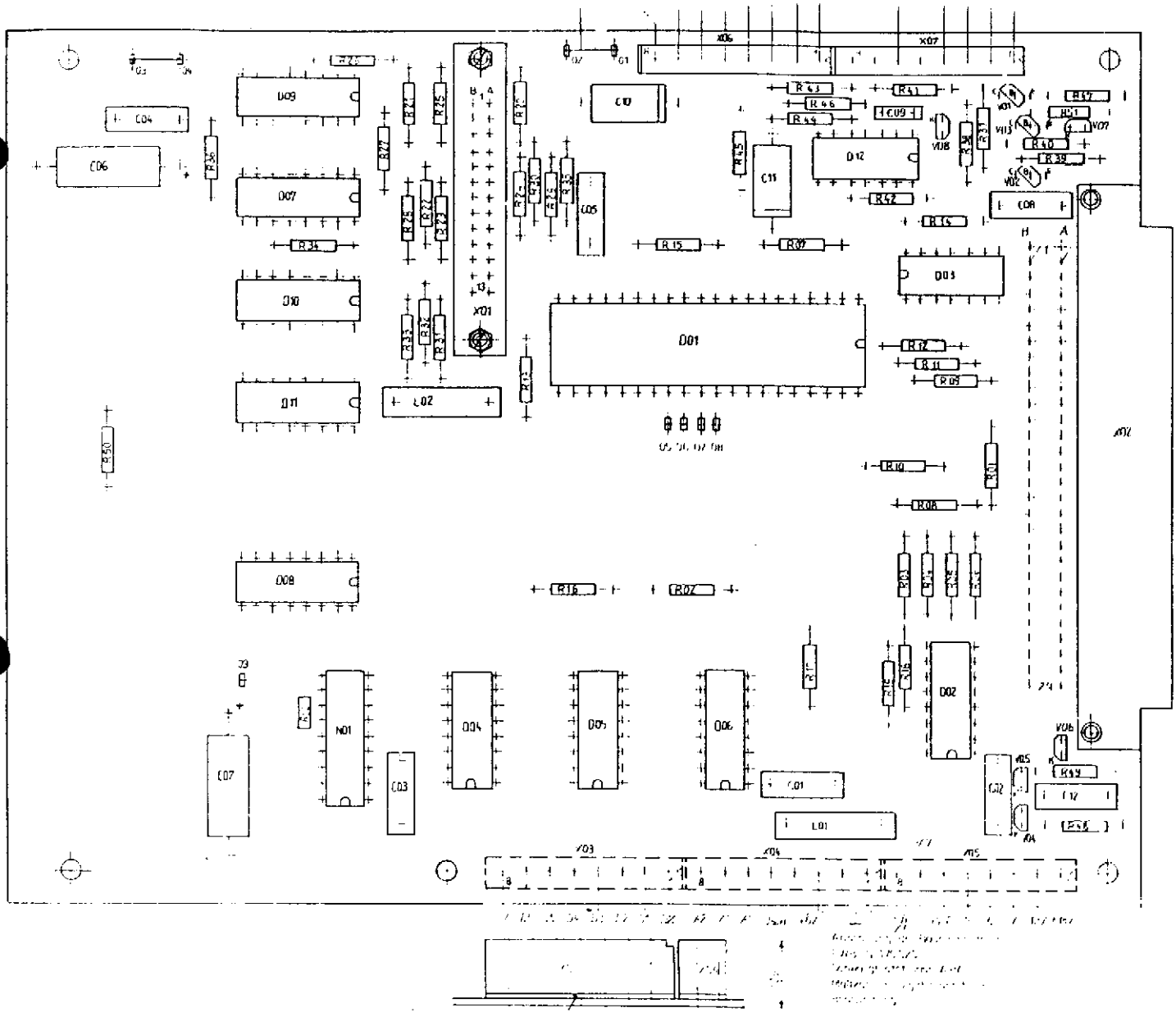

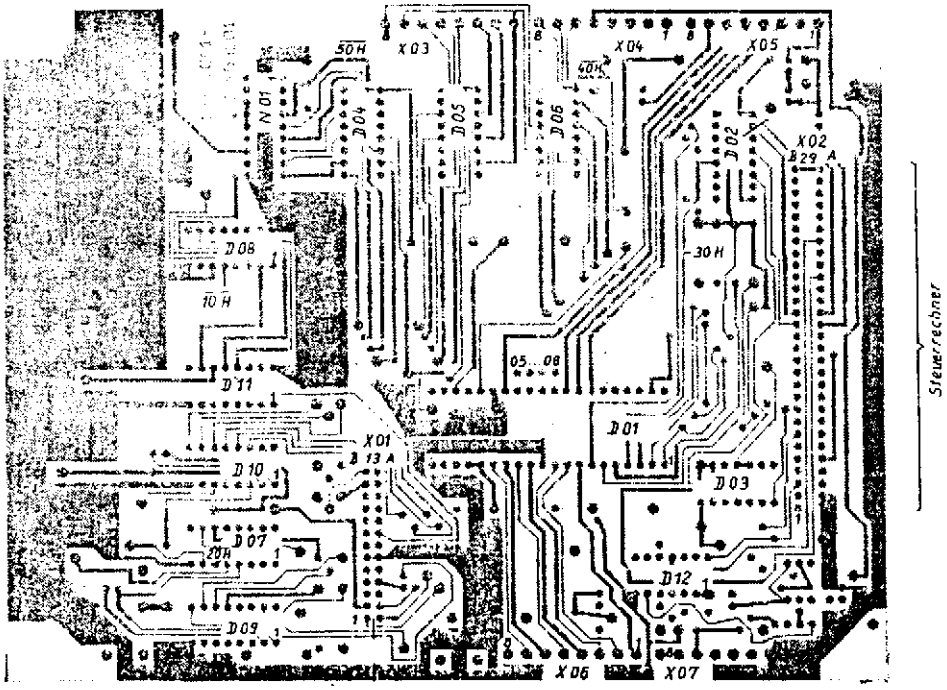

EIN - AUSGABELOGIK
1340.041-01453

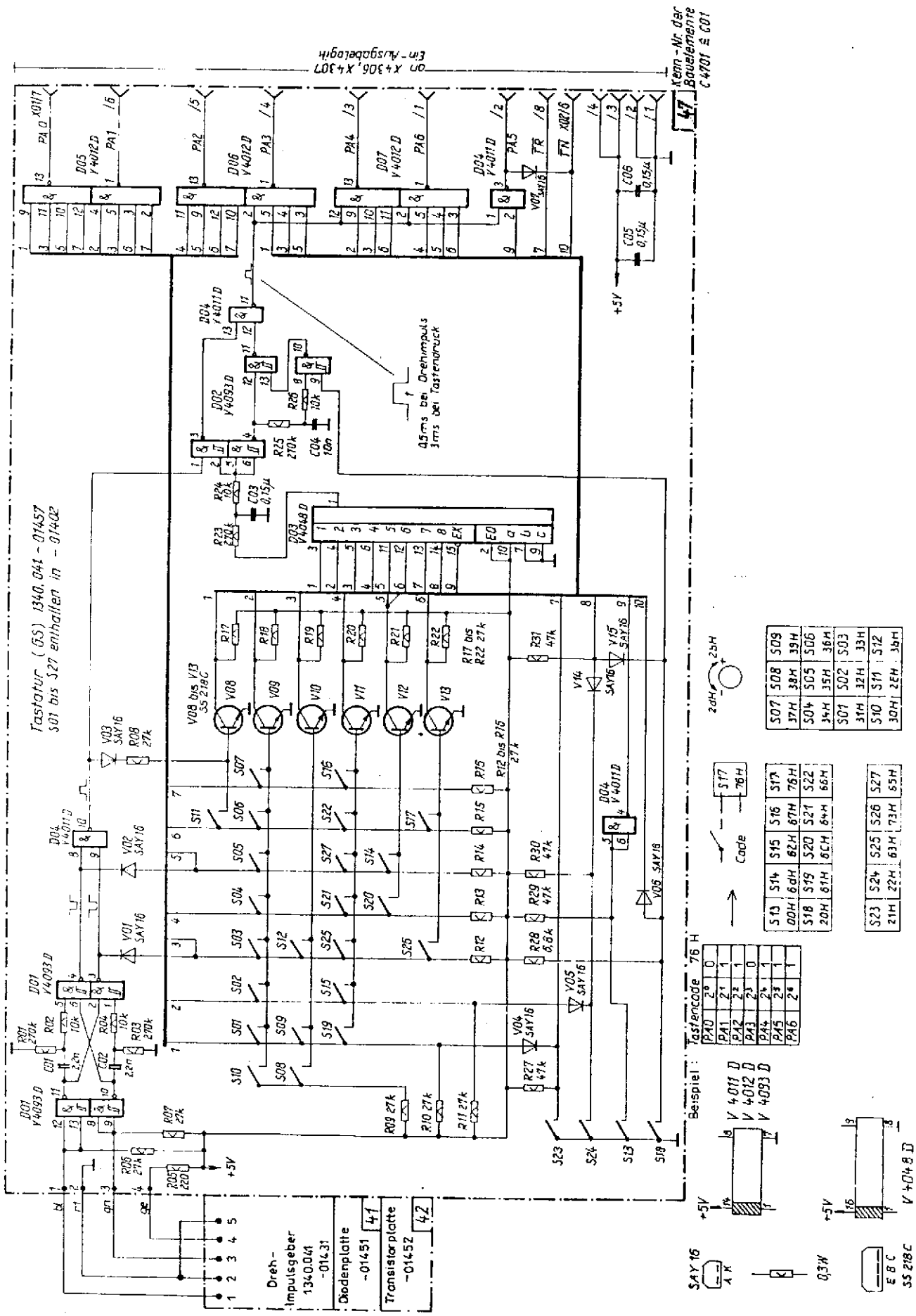

TASTATUR , VOLLSTÄNDIG
1340.041-01402 Sp

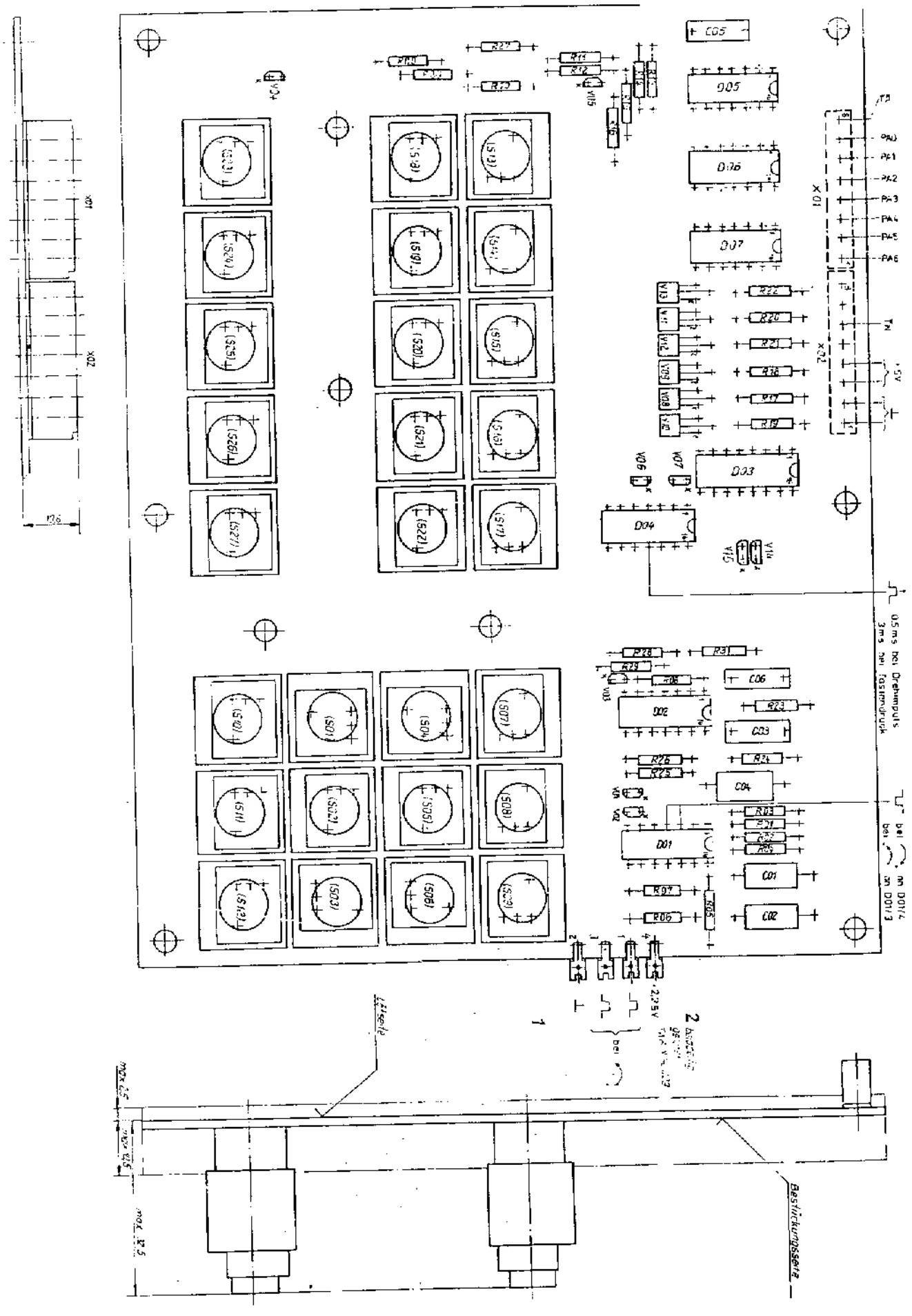

TASTATUR , VOLLSTÄNDIG
1340.041-01402

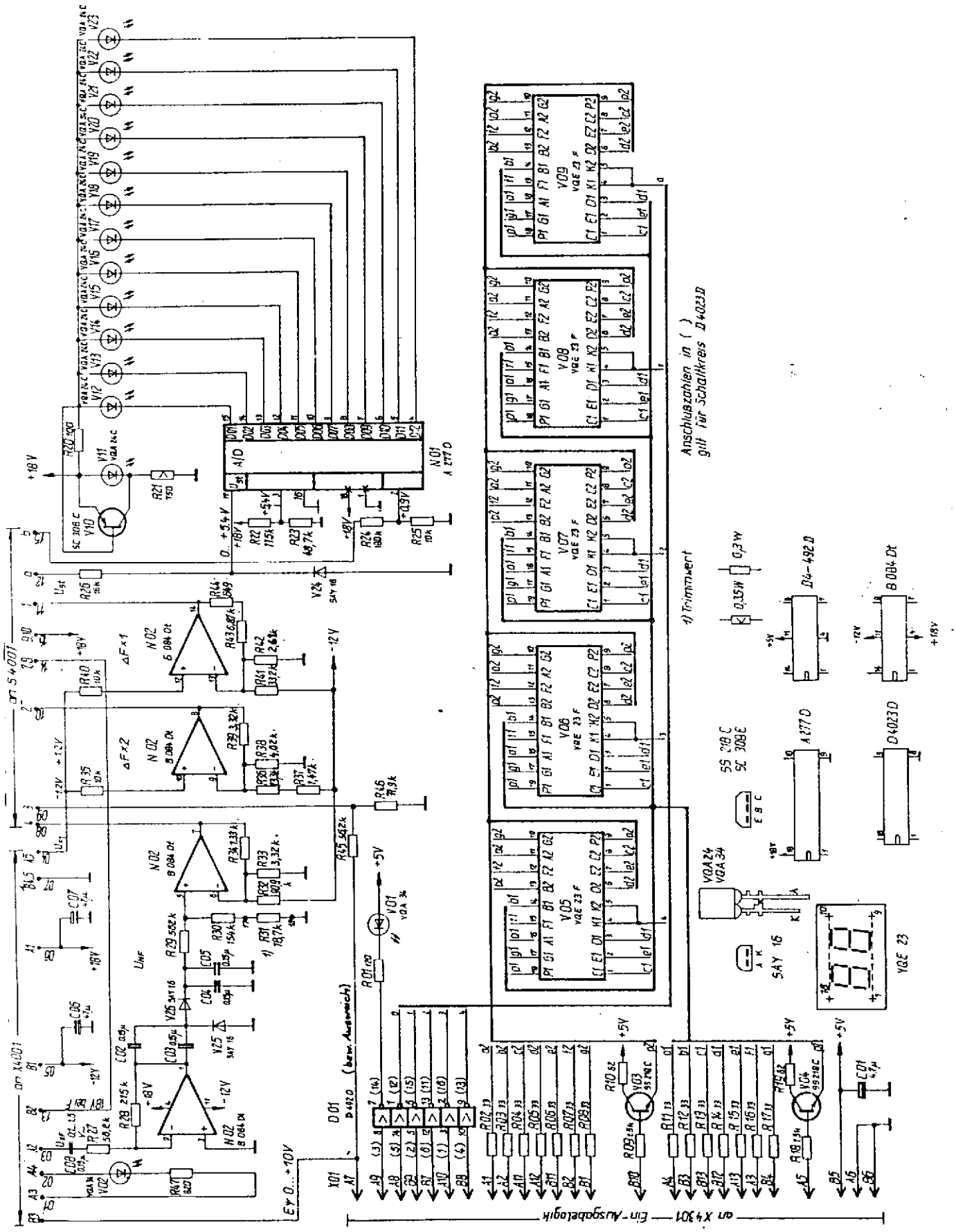

ANZEIGE
1340.041-01456 Sp

ANZEIGE
1340.041-01456

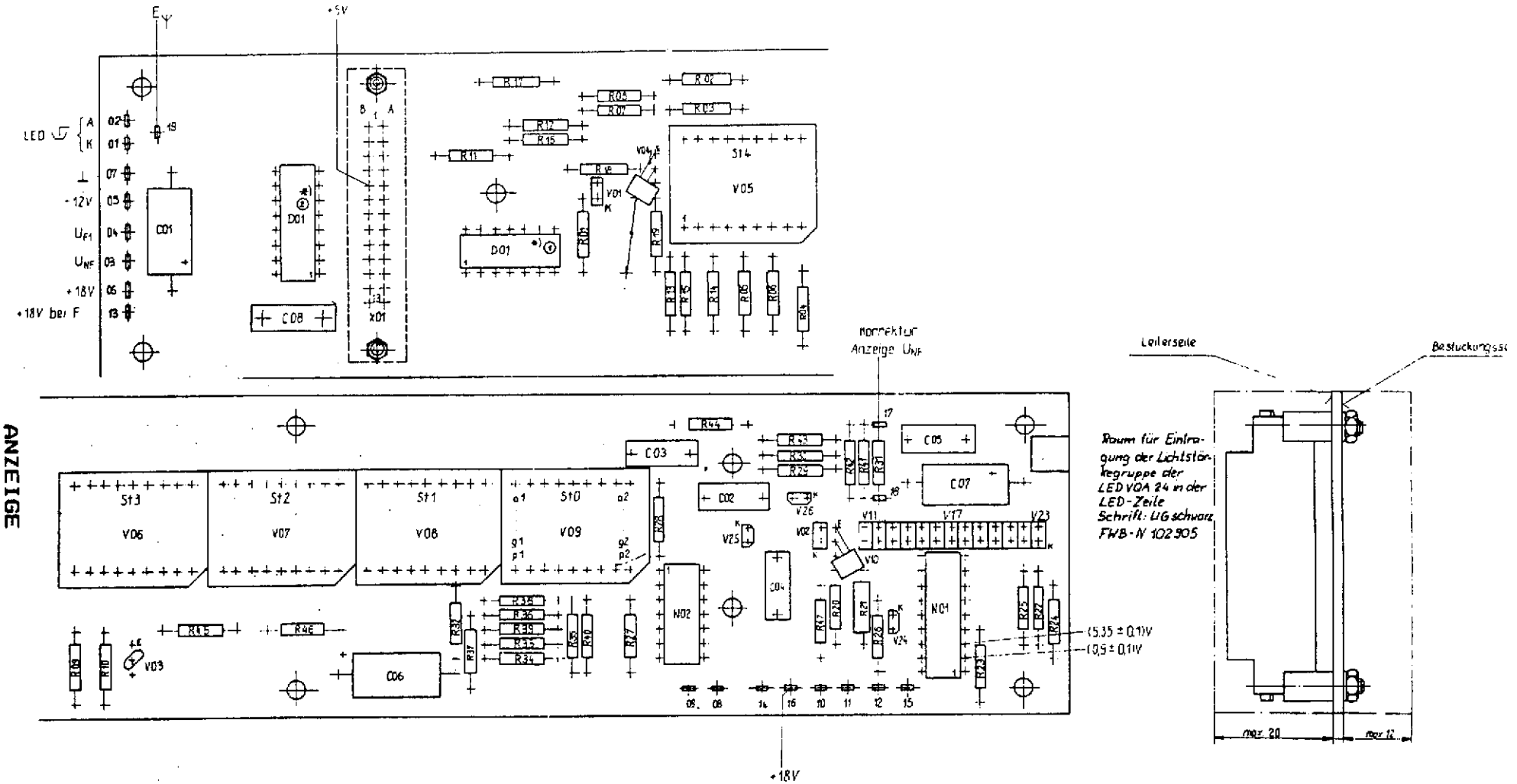

Anordnung der Bauelemente nach FWB-N 170.025 siehe Sl

Sl wird gelötet nach APA

Maßzahl in ( ) gilt nicht für die Bearbeitung

*) Wahlweise Bestückung

① Bei Einsatz von D492

② Bei Einsatz der Ausweich BE

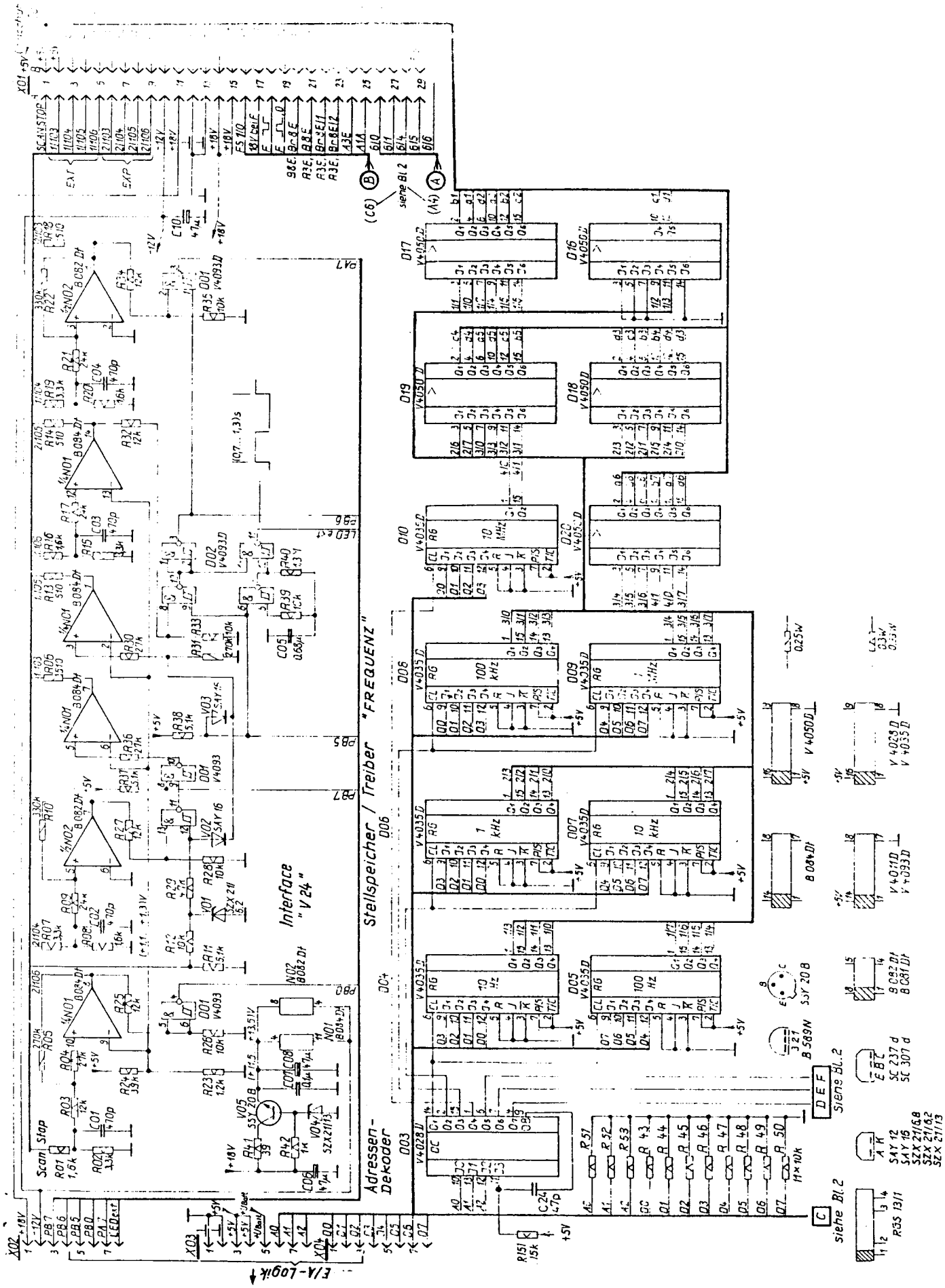

STELLSPEICHER
1340.041-01455 Sp Bl.1

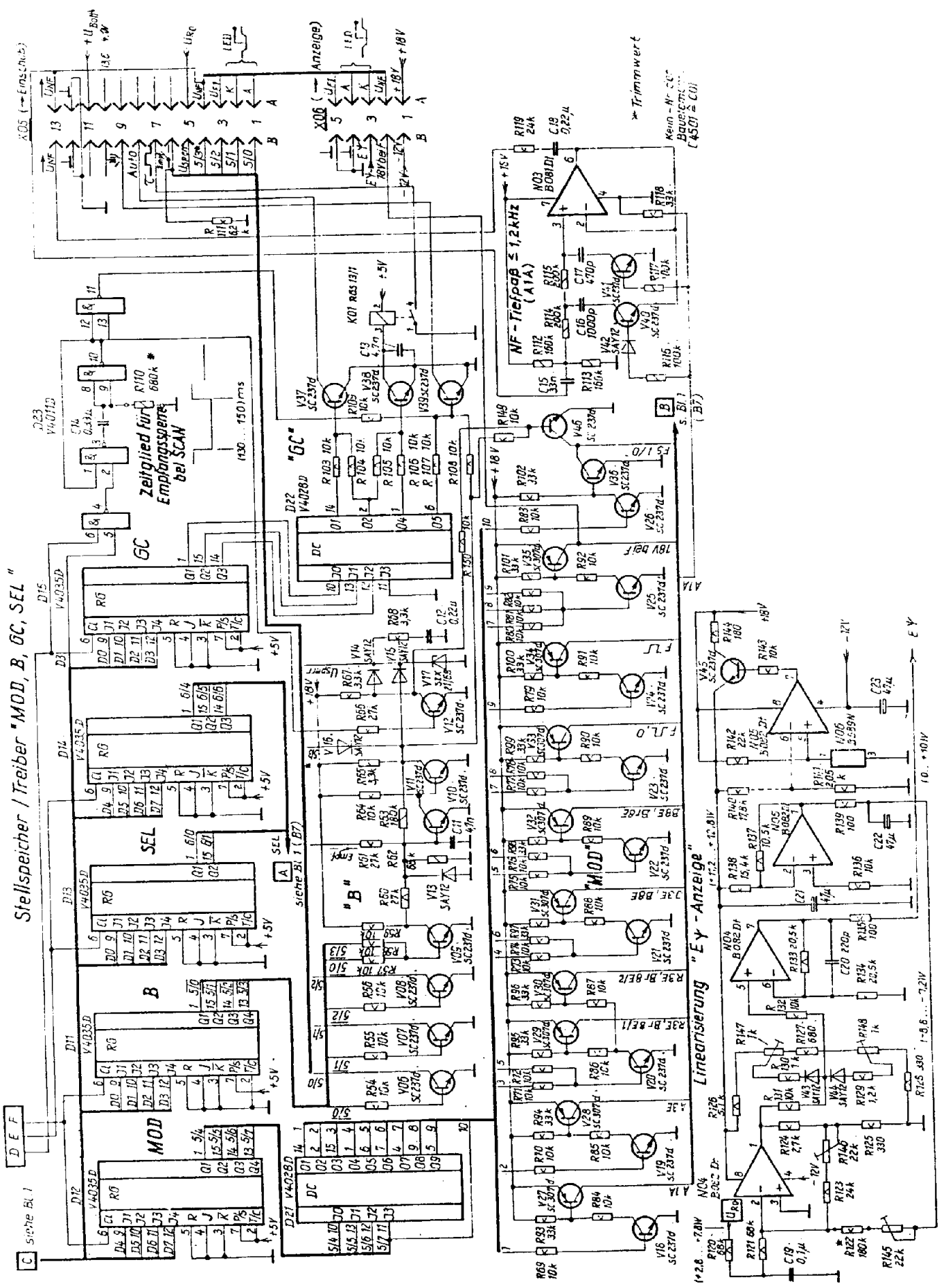

STELLSPEICHER
1340.041-01455 Sp Bl.2

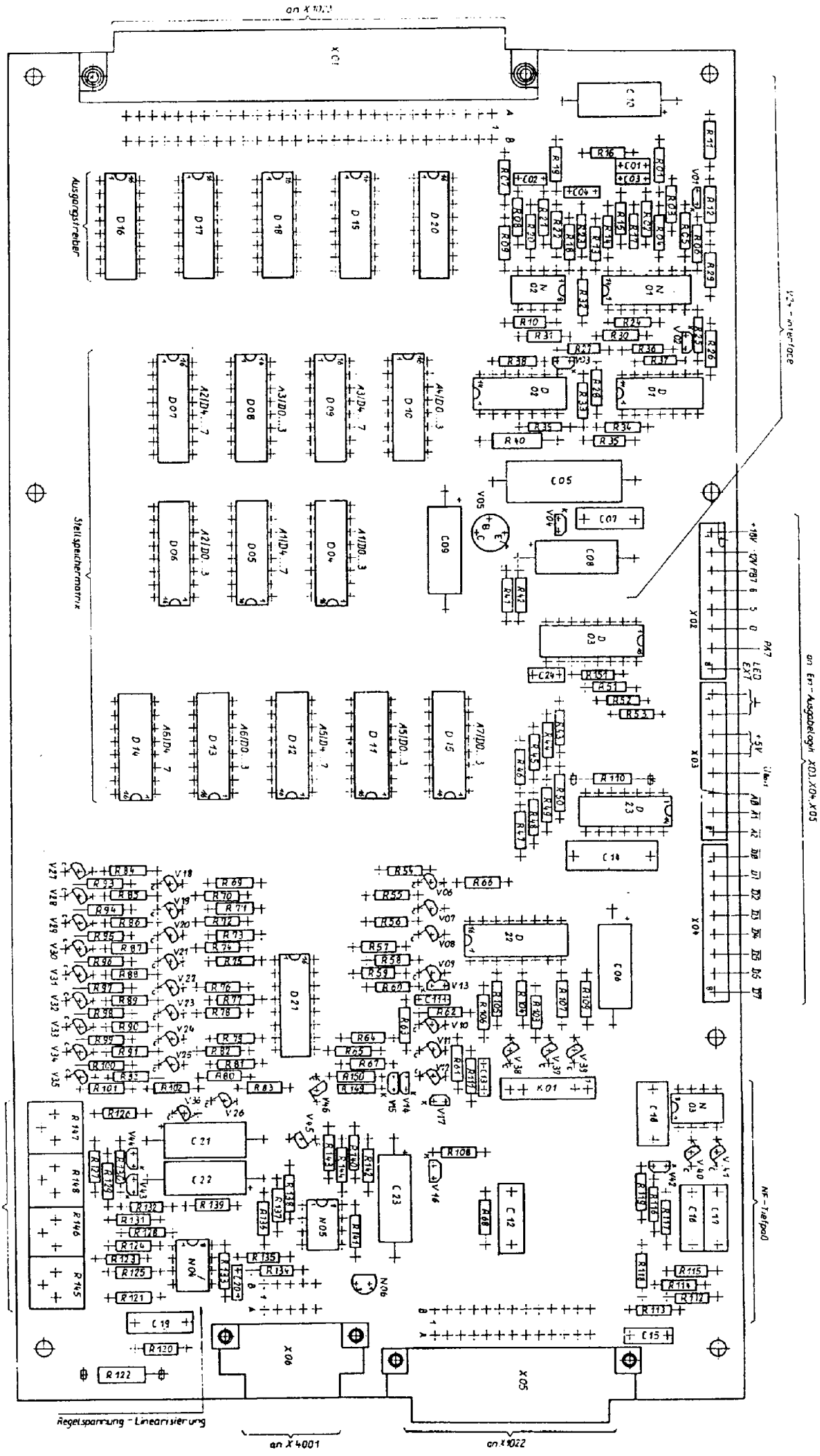

STELLSPEICHER
1340.041-01455

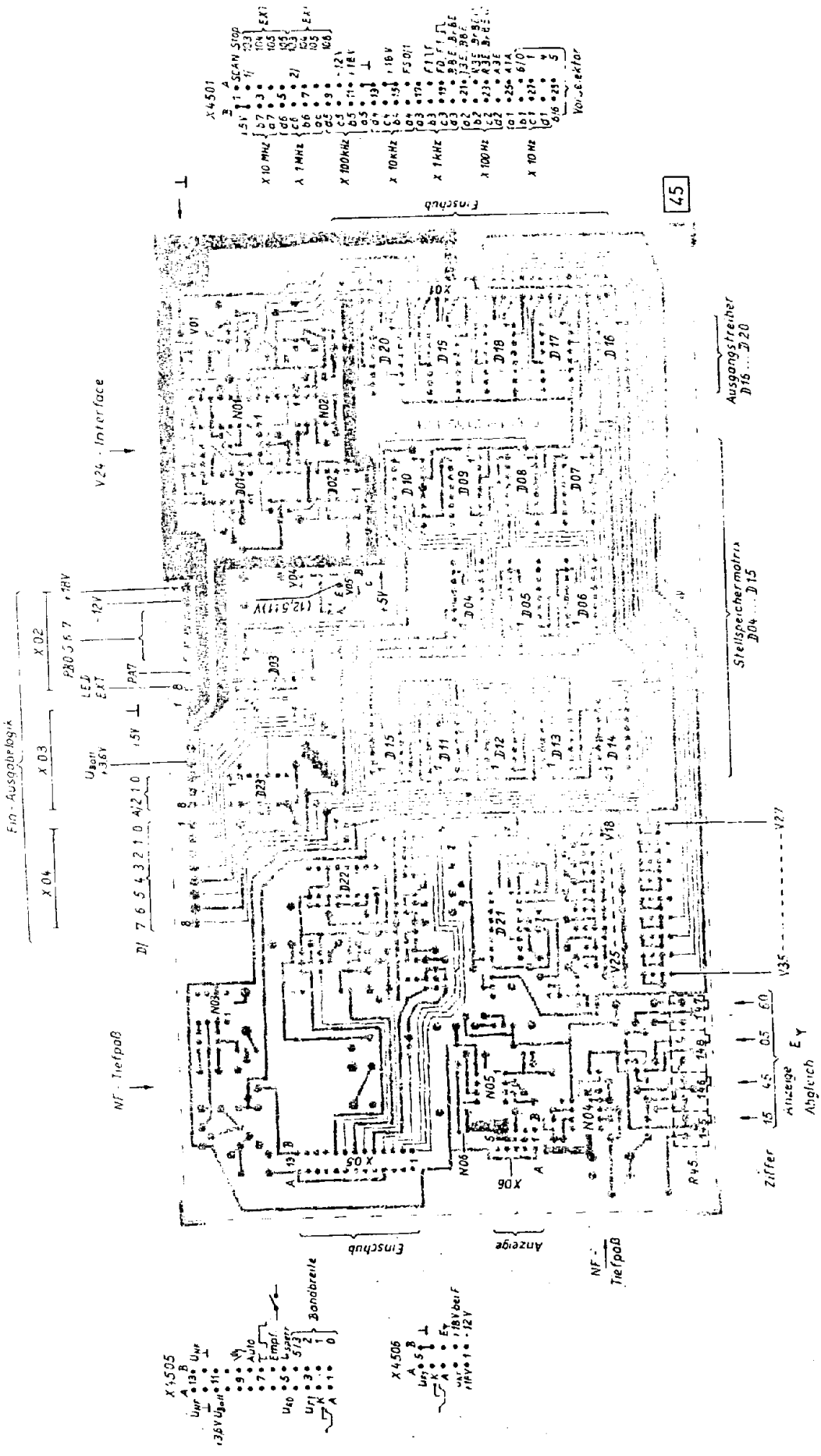

STELLSPEICHER
1340.041-01455

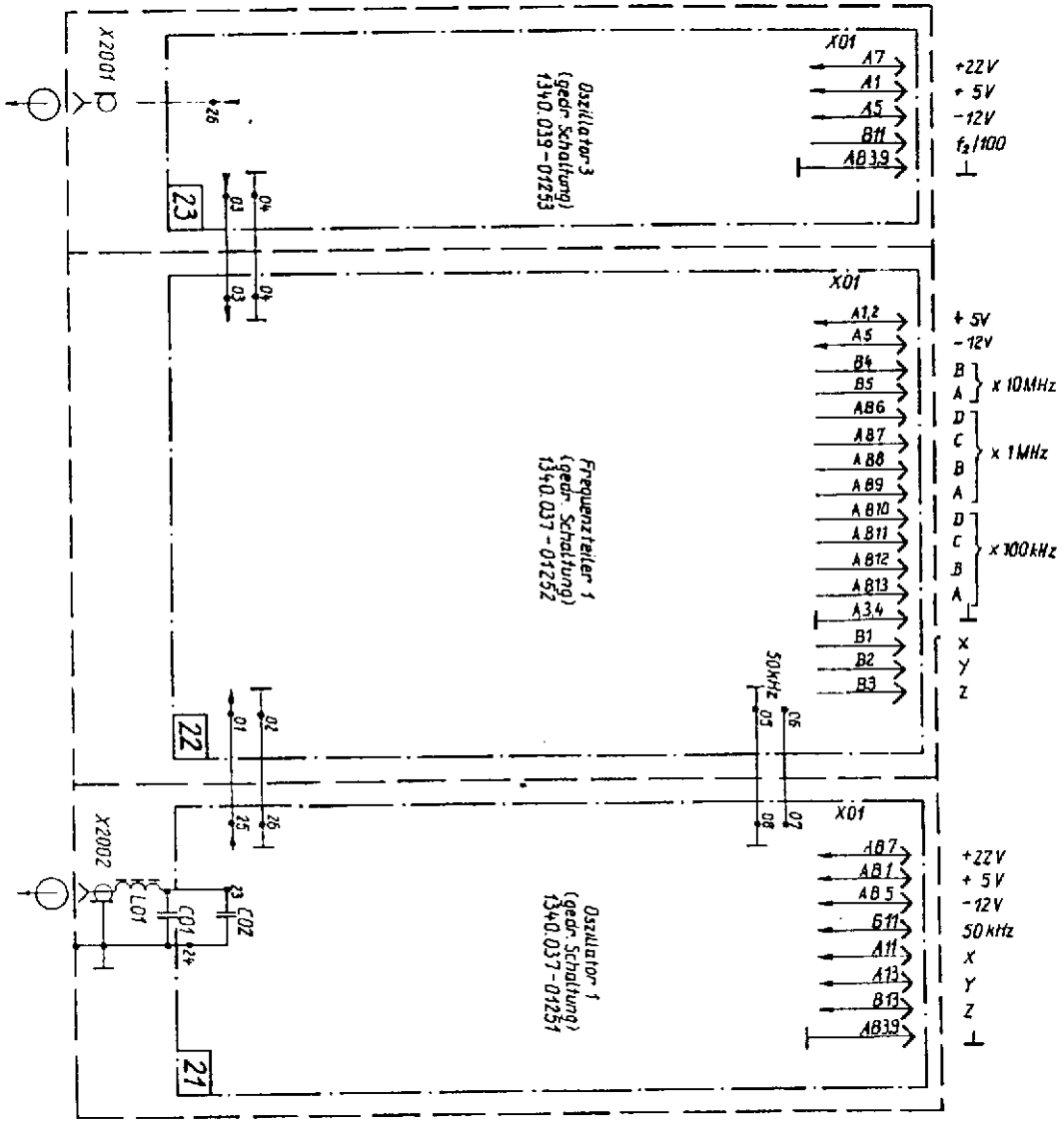

FREQUENZAUFBEREITUNG 1
1340.041-01211 Sp

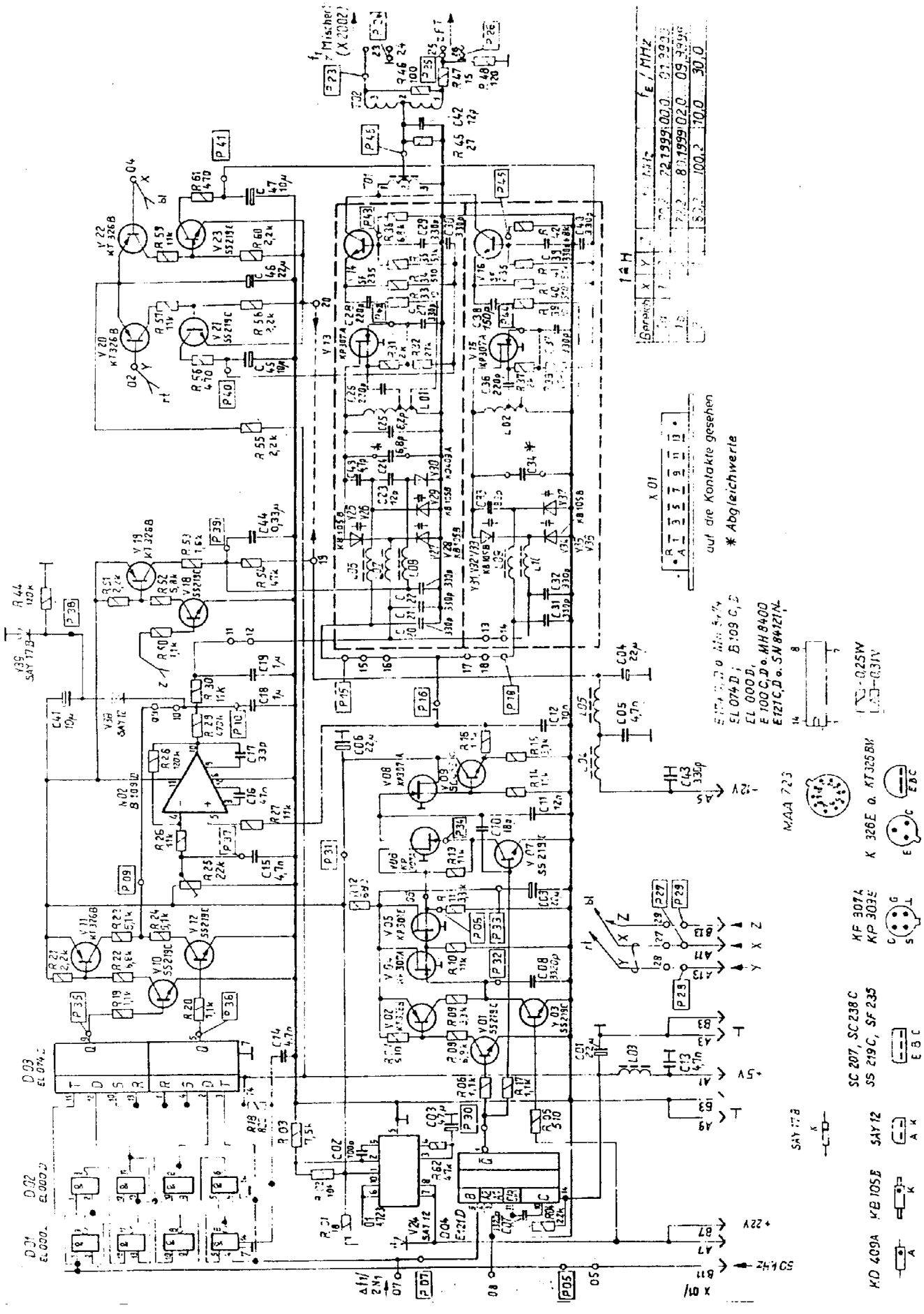

OSZILLATOR 1
1340.037-01251 Sp

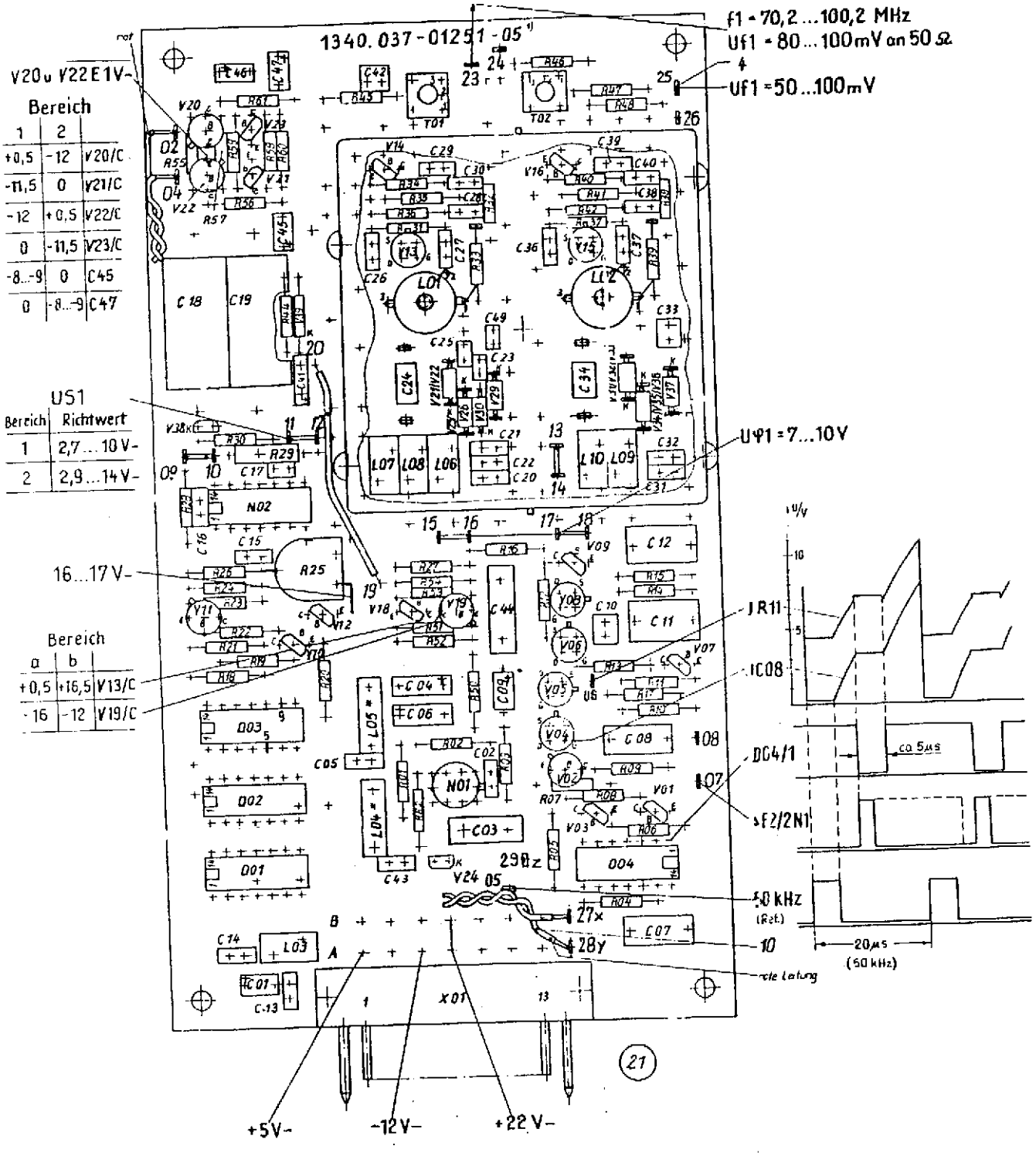

OSZILLATOR 1
1340.037-01251

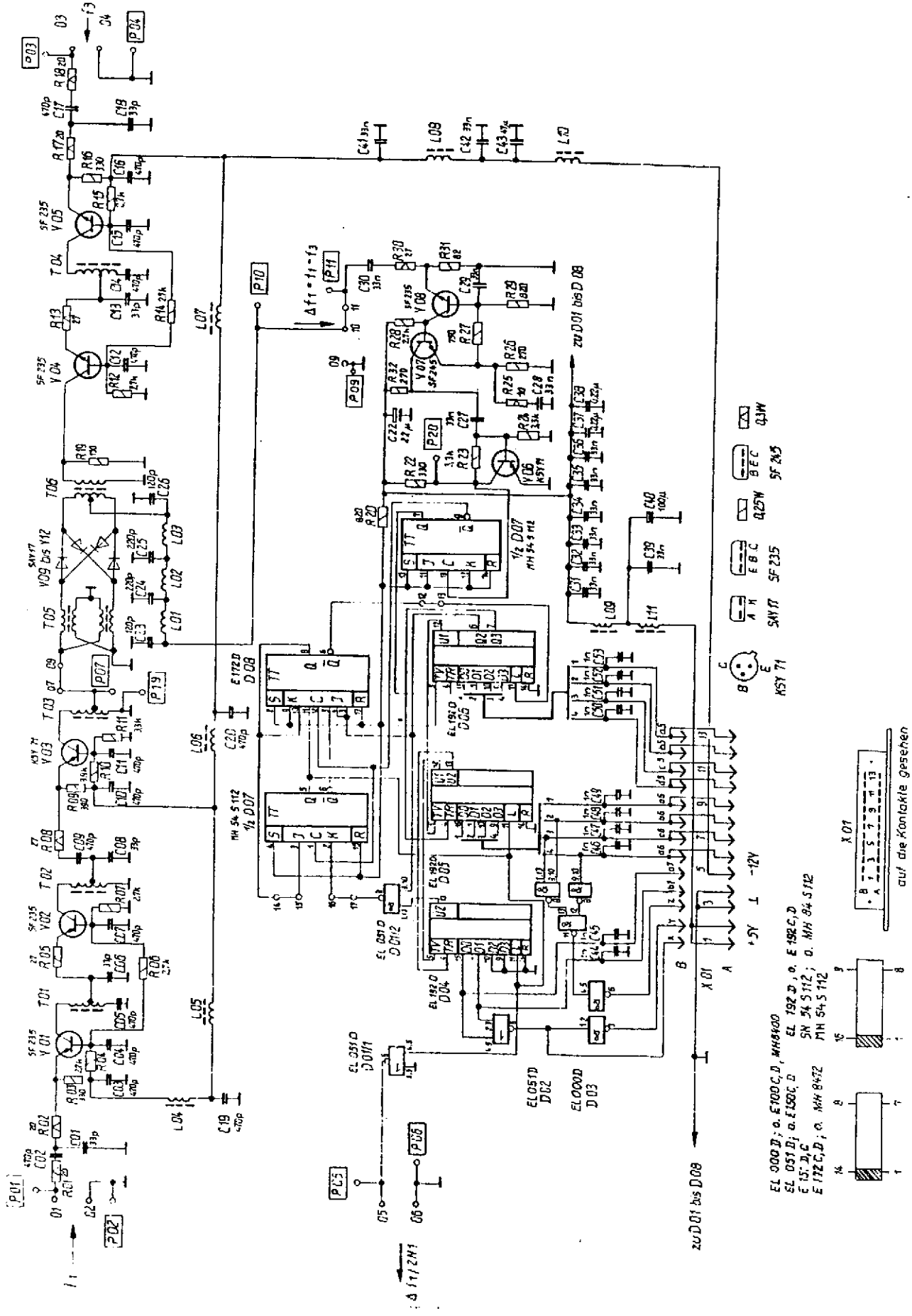

FREQUENZTEILER 1
1340.037-01252 Sp

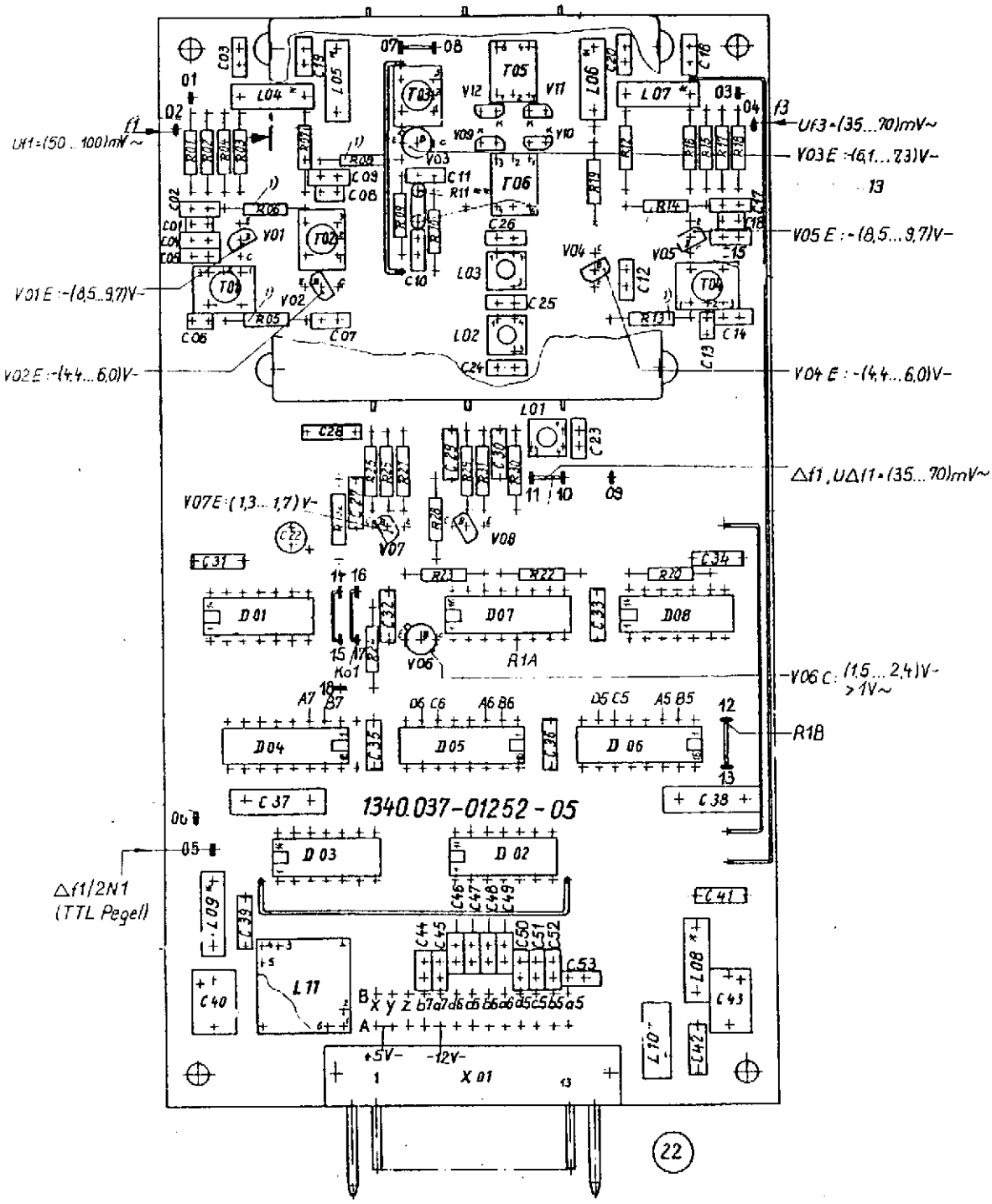

FREQUENZTEILER 1
1340.037-01252

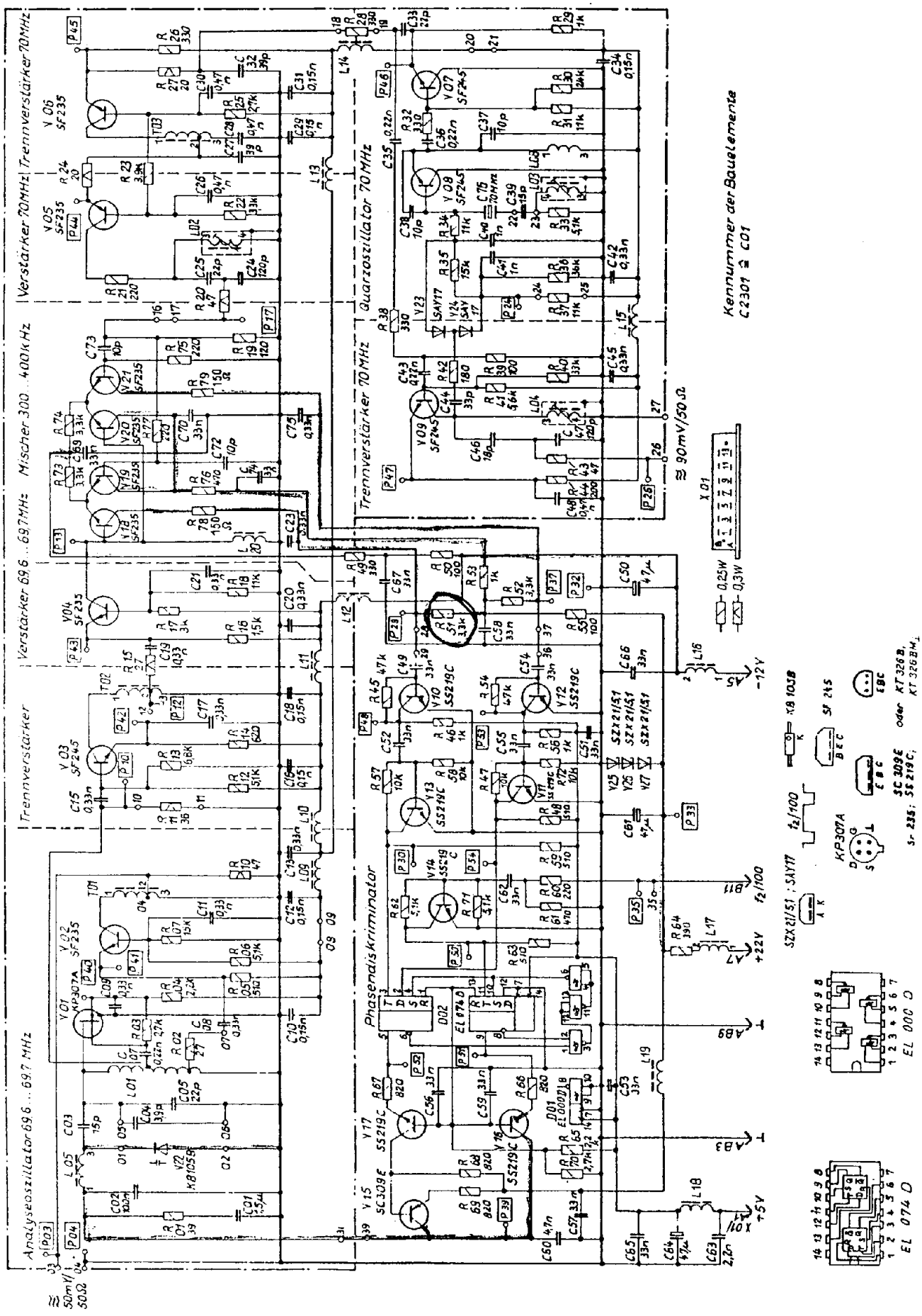

OSZILLATOR 3
1340.039-01253 Sp

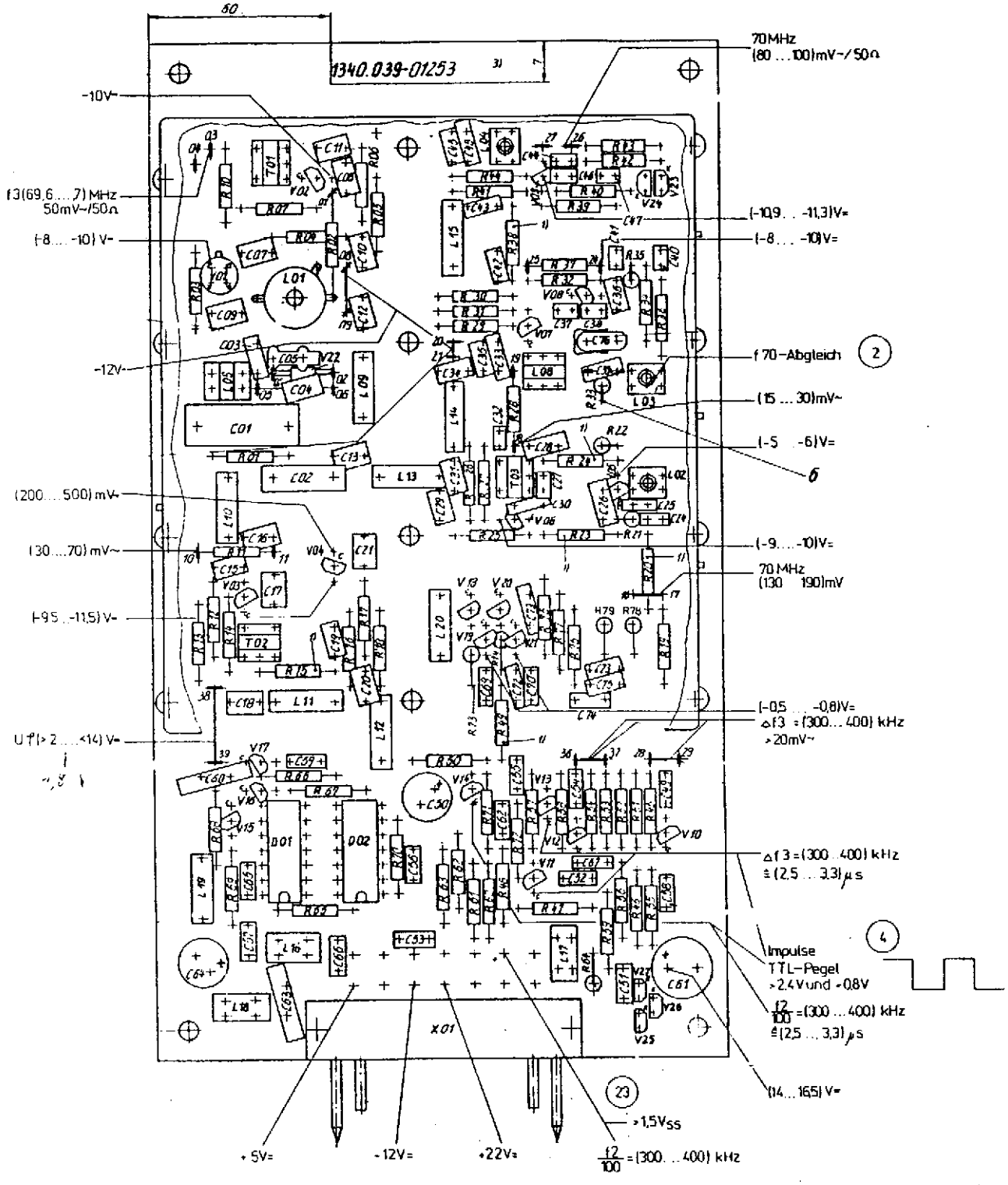

OSZILLATOR 3
1340.039-01253

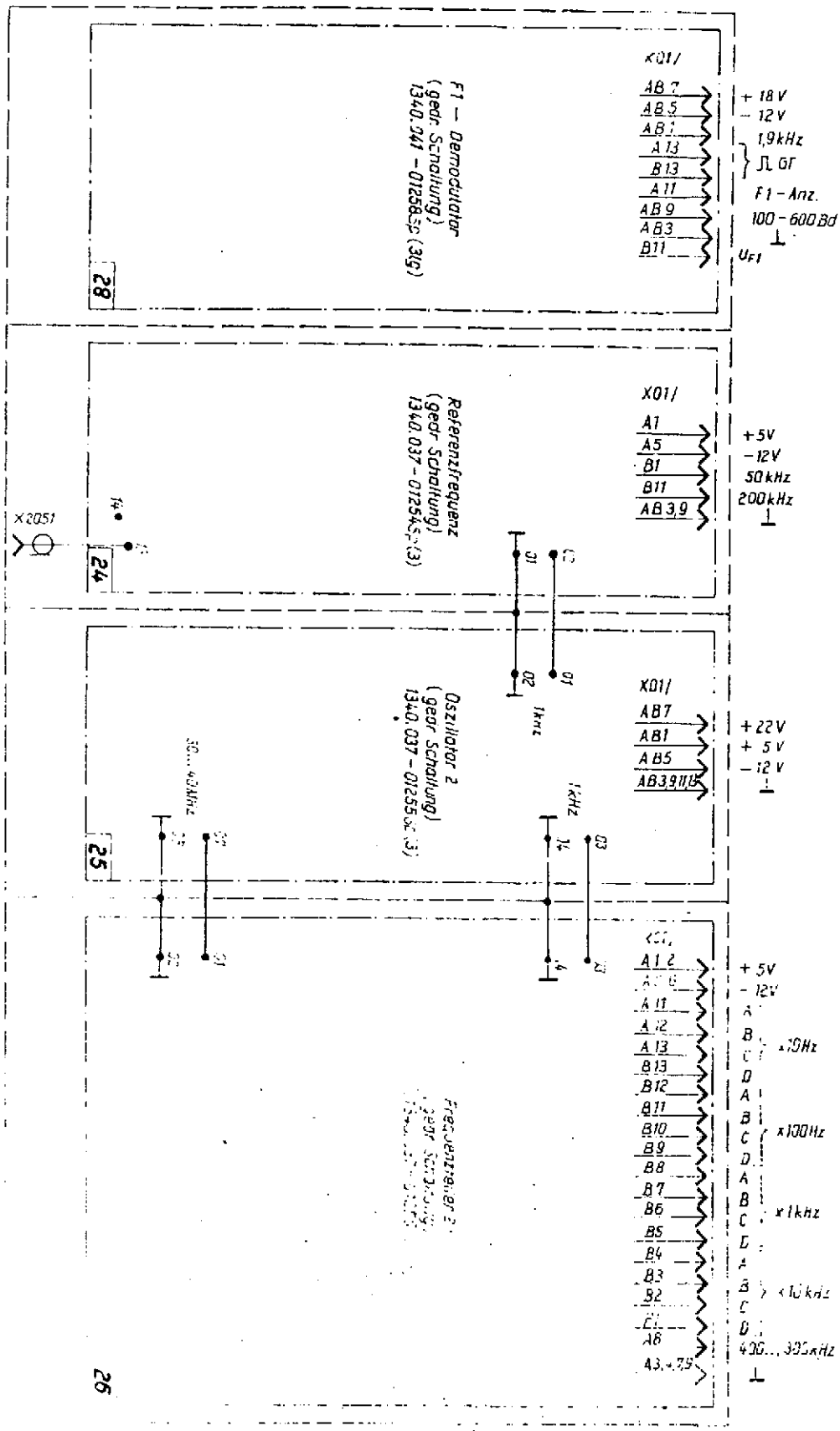

FREQUENZAUFBEREITUNG 2 und F1-DEMODULATOR
1340.041-01221 Sp

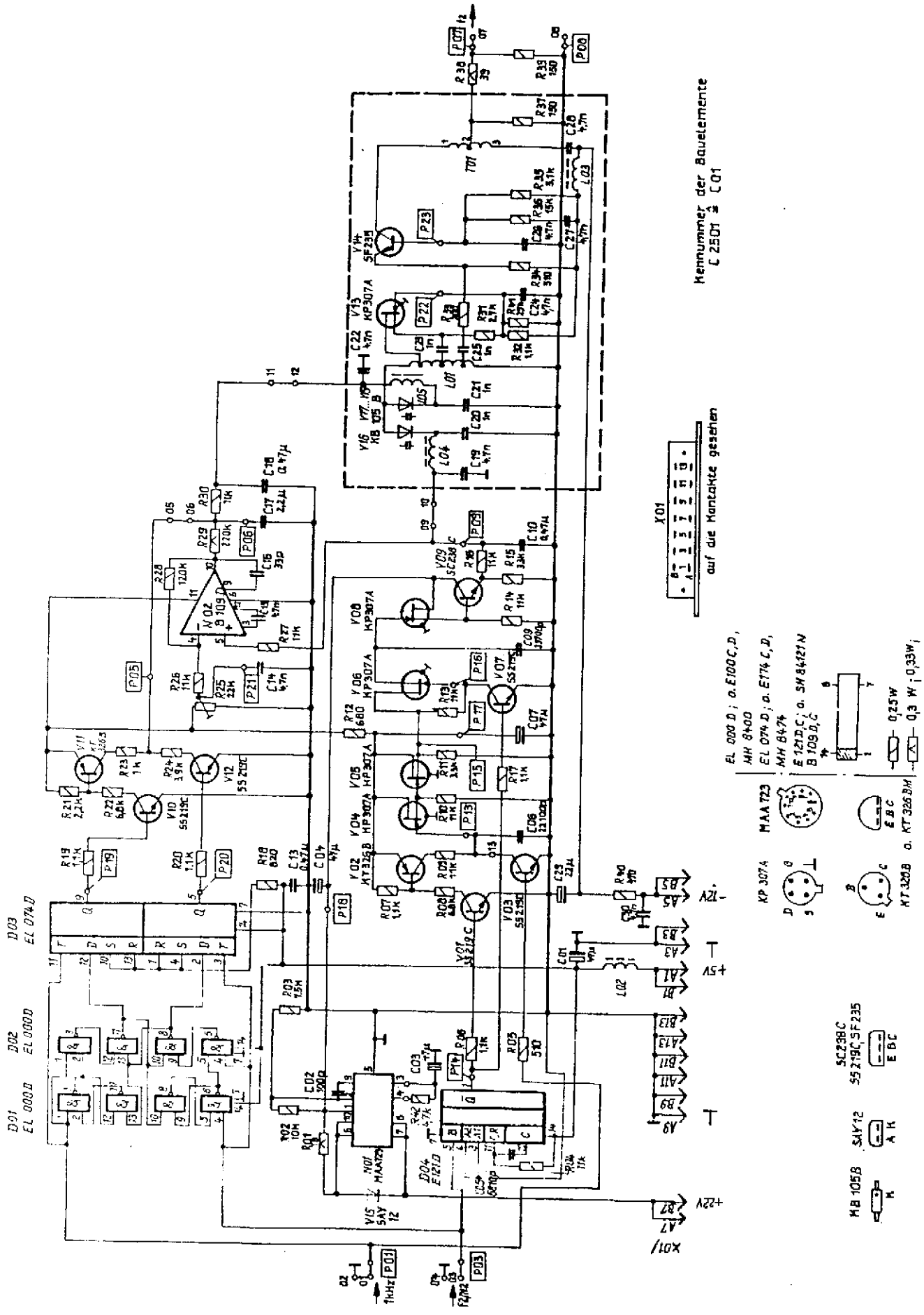

OSZILLATOR 2
1340.037-01255 Sp

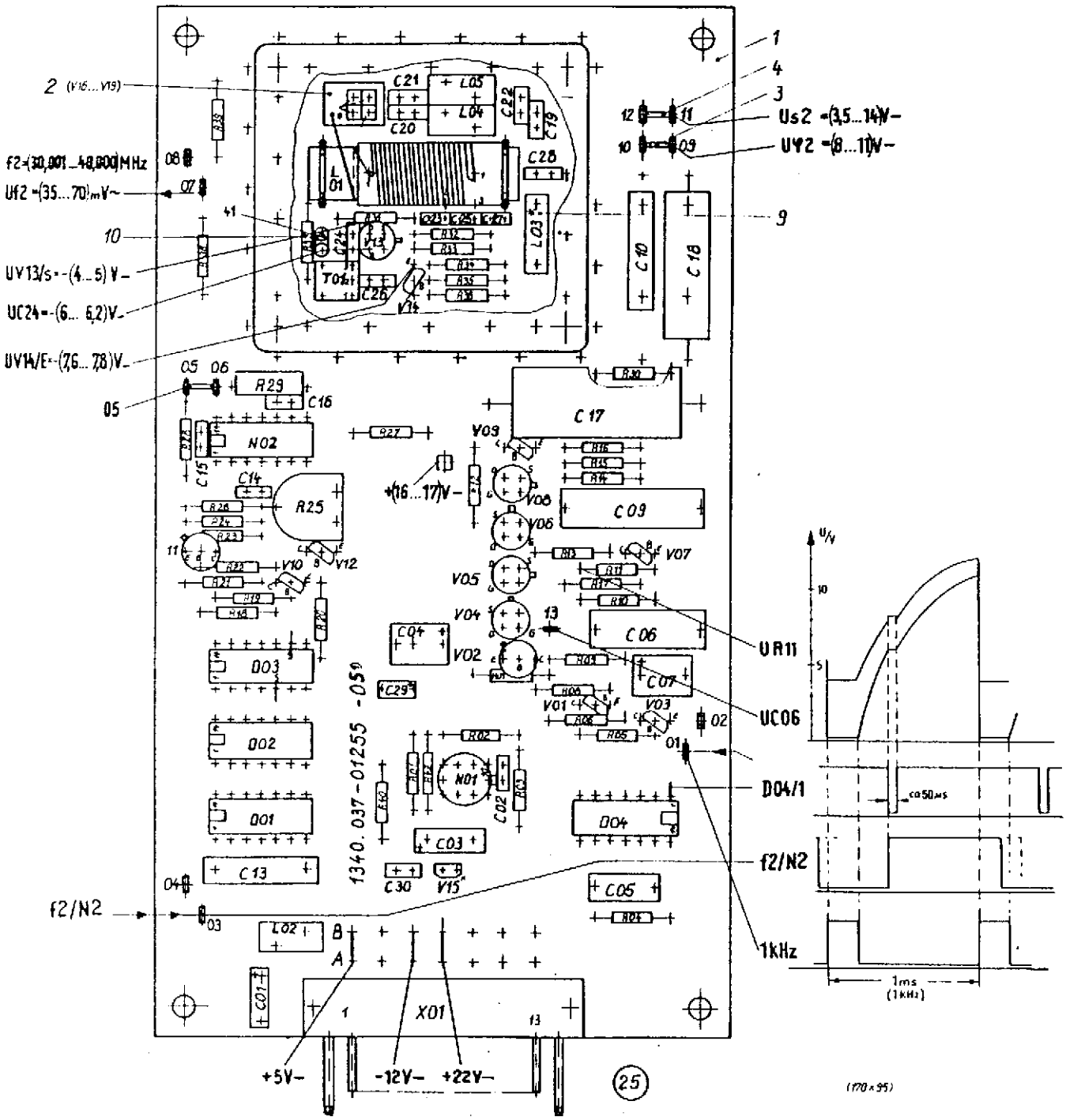

OSZILLATOR 2
1340.037-01255

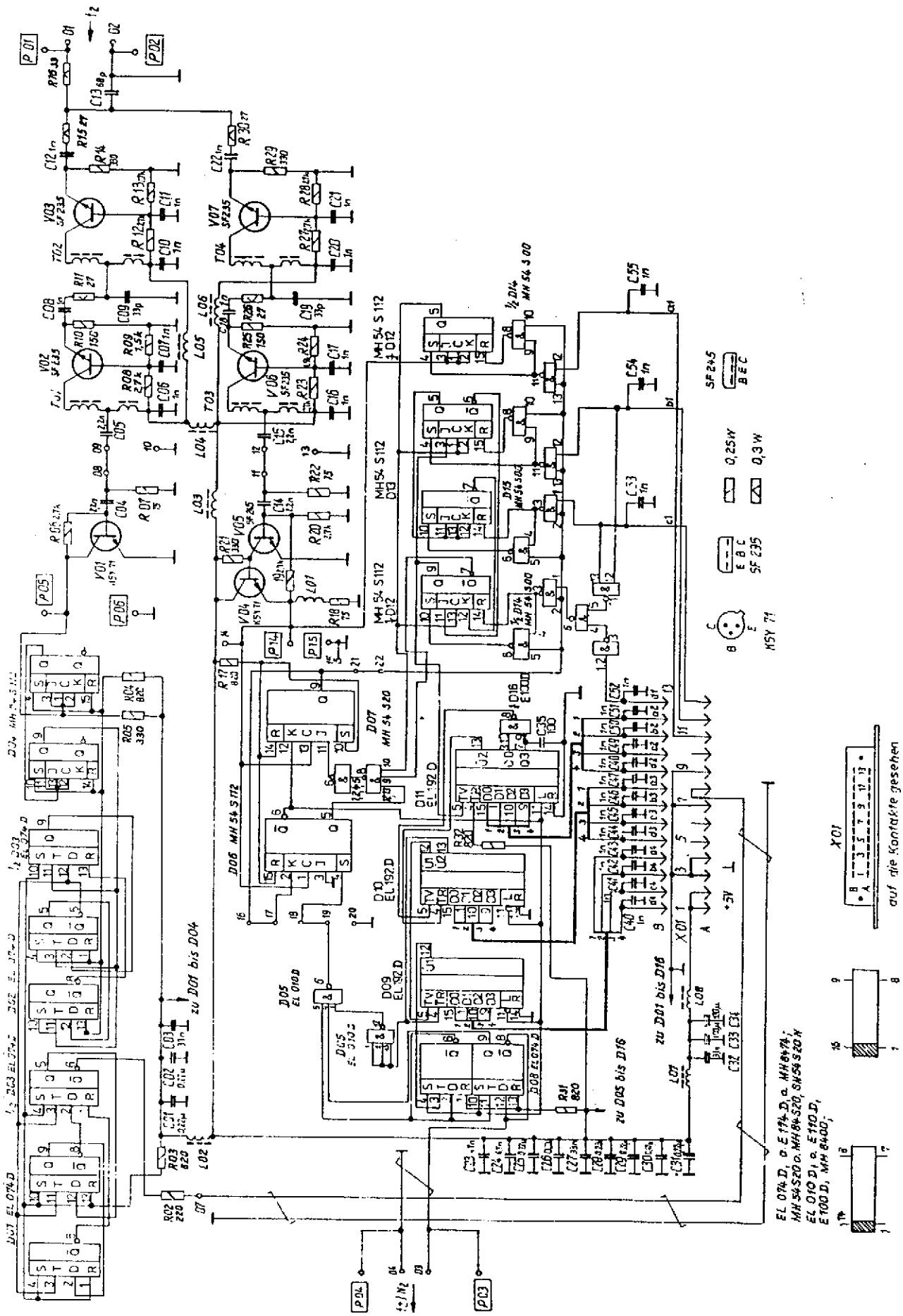

1340.037-01256 Sa

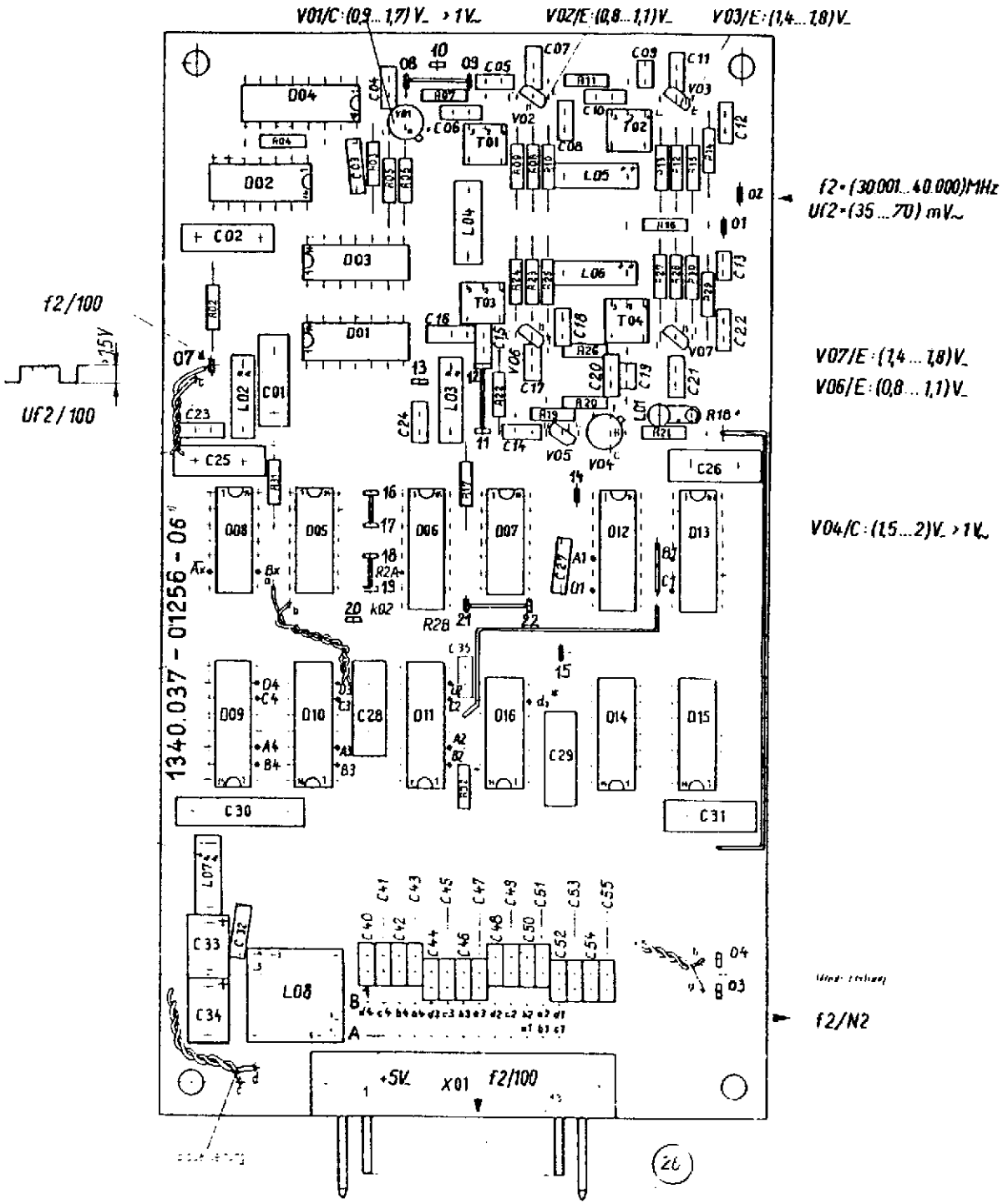

FREQUENZTEILER 2
1340.037-01256

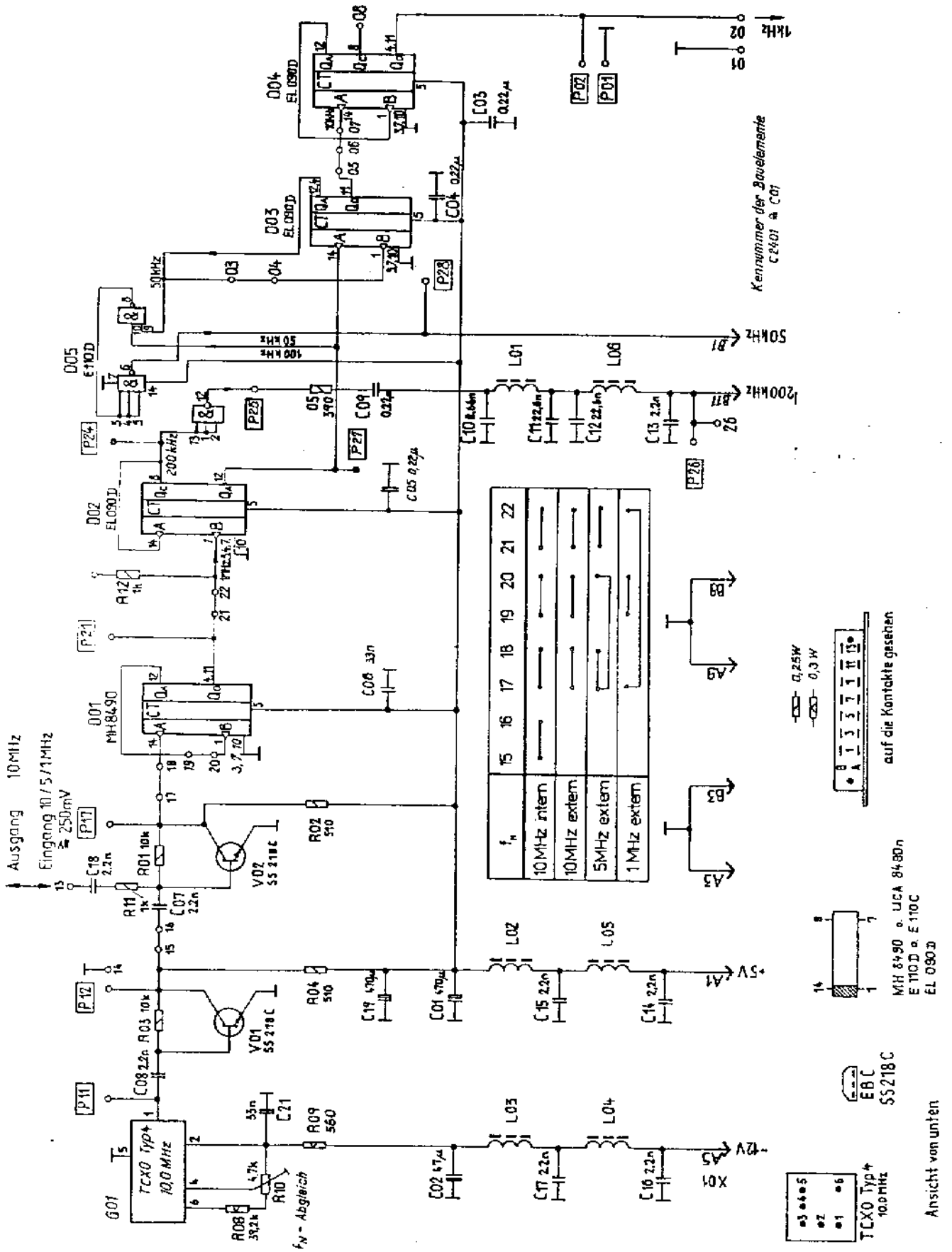

REFERENZFREQUENZ
1340.037-01254 Sp

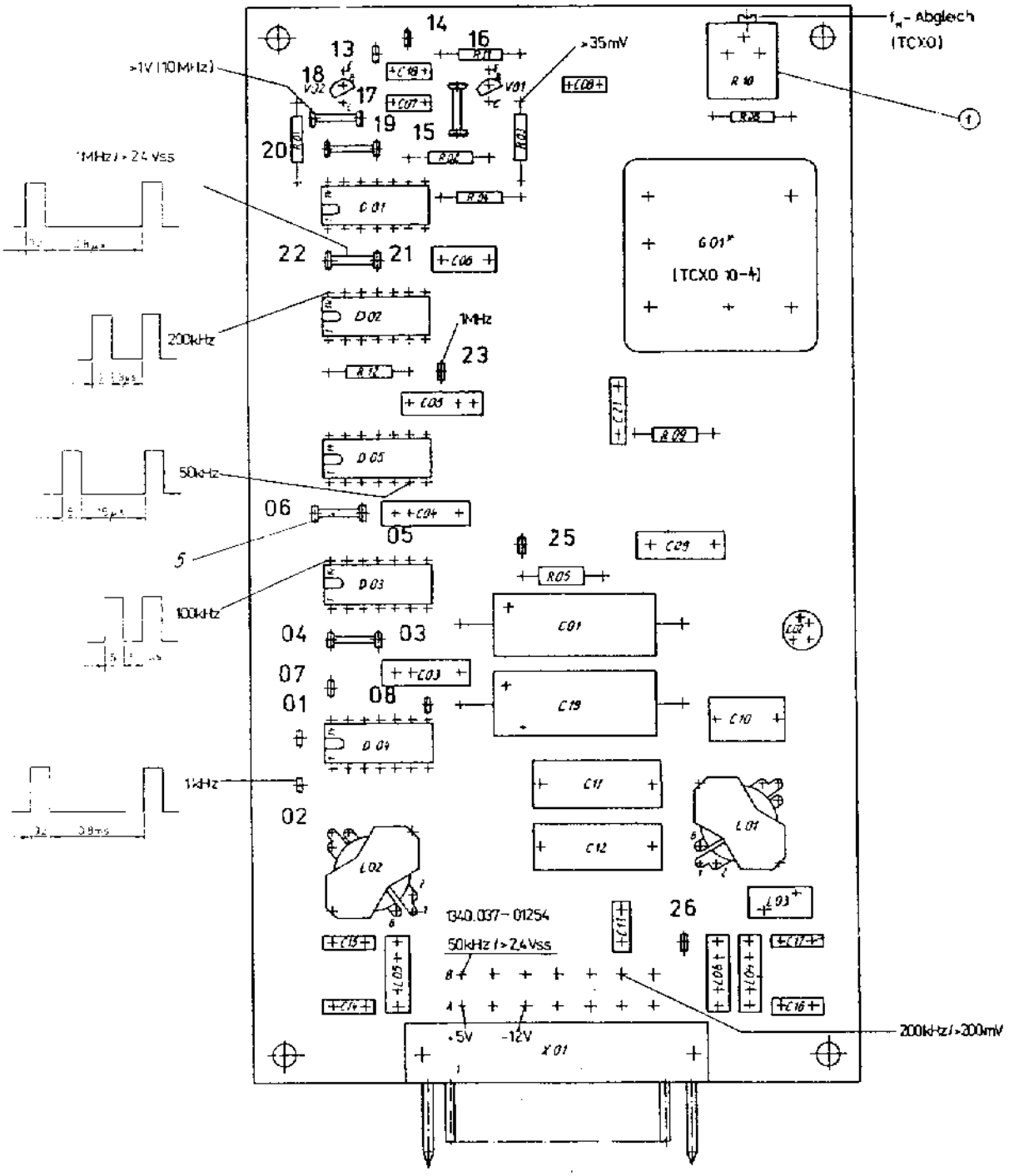

REFERENZFREQUENZ
1340.037-01254

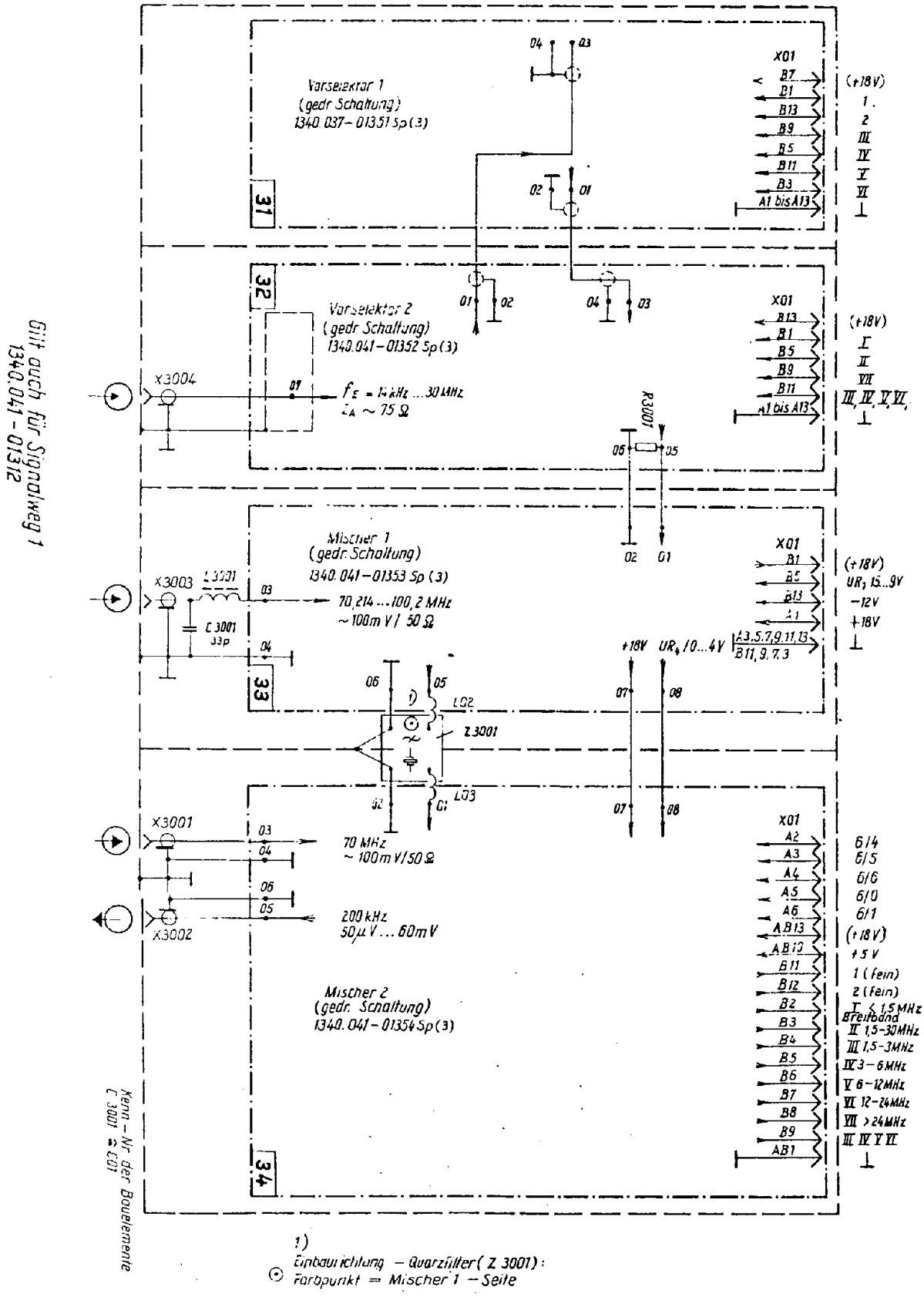

SIGNALWEG 1
1340.041-01311 Sp

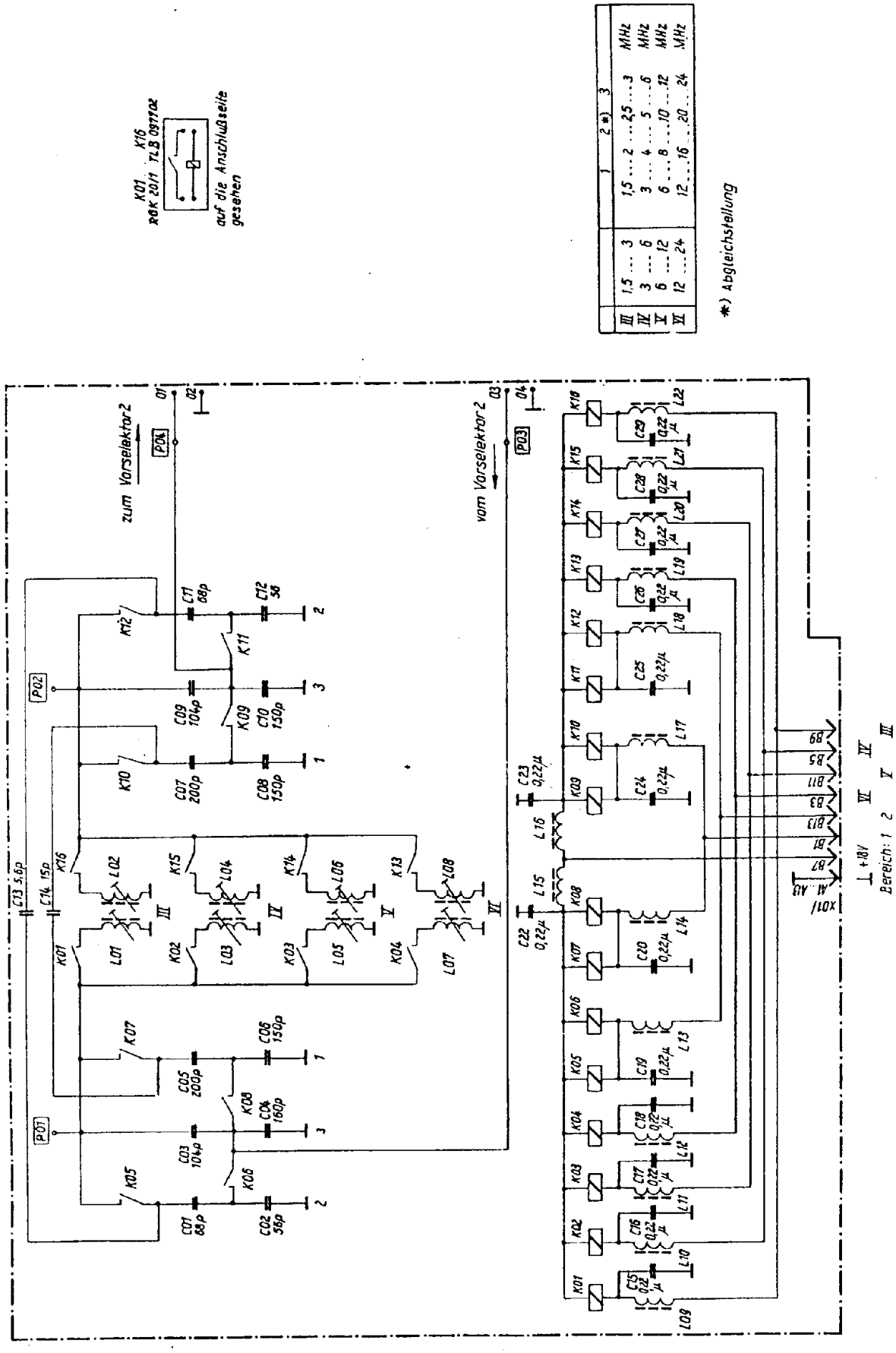

	1	2 *)	3	
III	1,5 ... 3	1,5 ... 2	2,5 ... 3	MHz
IV	3 ... 6	3 ... 4	5 ... 6	MHz
V	6 ... 12	6 ... 8	10 ... 12	MHz
VI	12 ... 24	12 ... 16	20 ... 24	MHz

*) Abgleichstellung

VORSELEKTOR 1
1340.037-01351 Sp

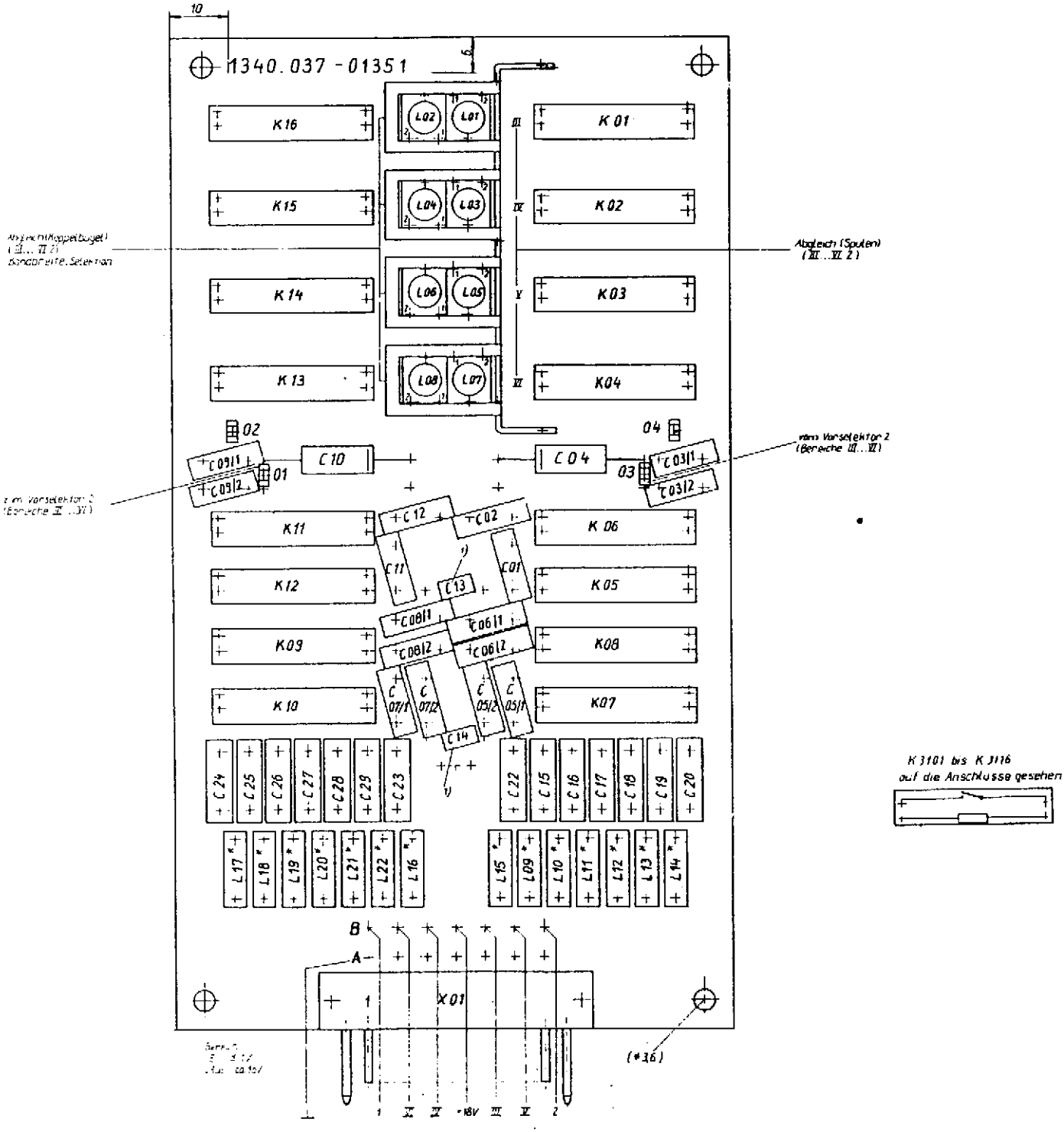

VORSELEKTOR 1
1340.037-01351

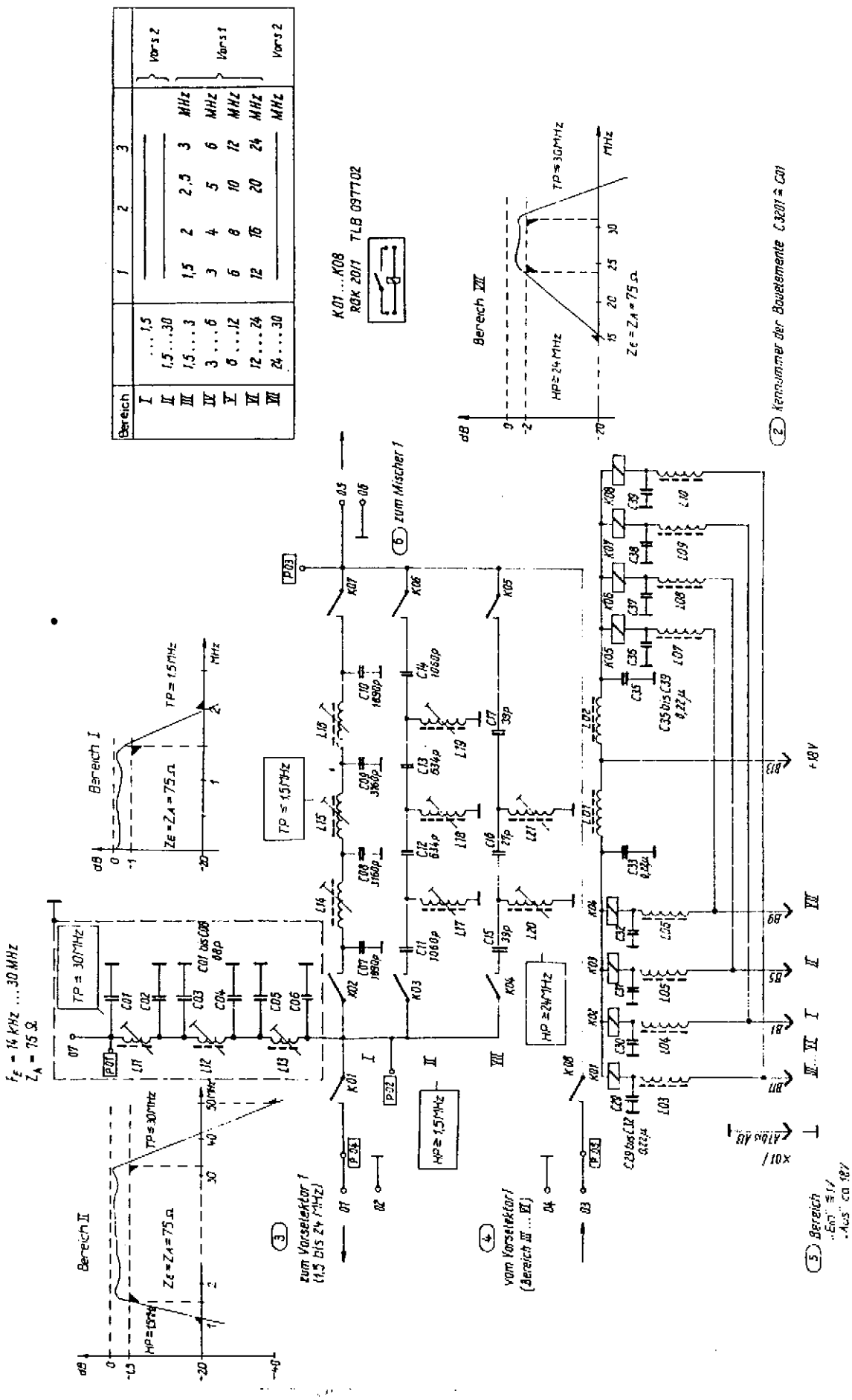

VORSELEKTOR 2
1340.041-01352 Sp

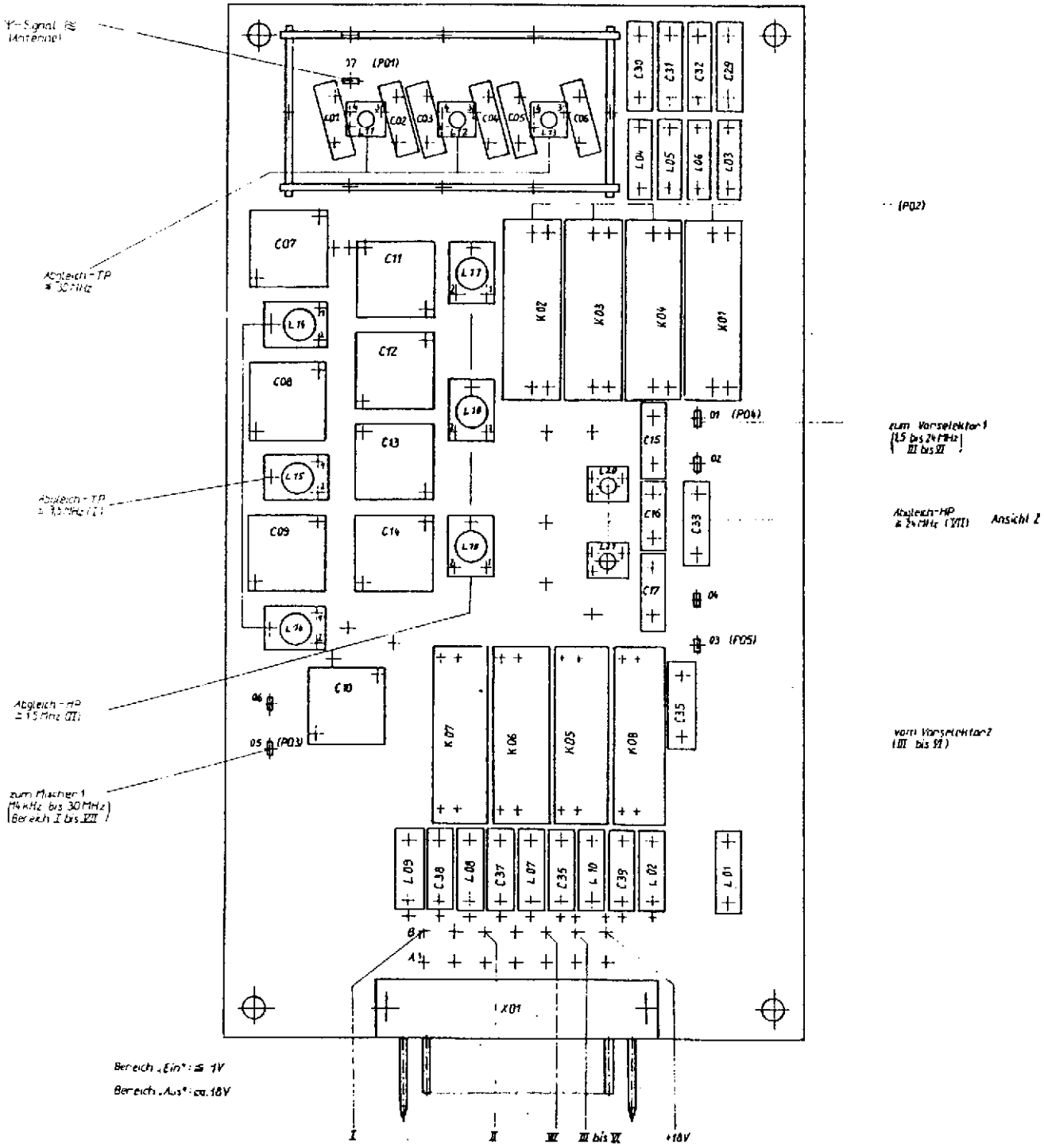

VORSELEKTOR 2
1340.041-01352

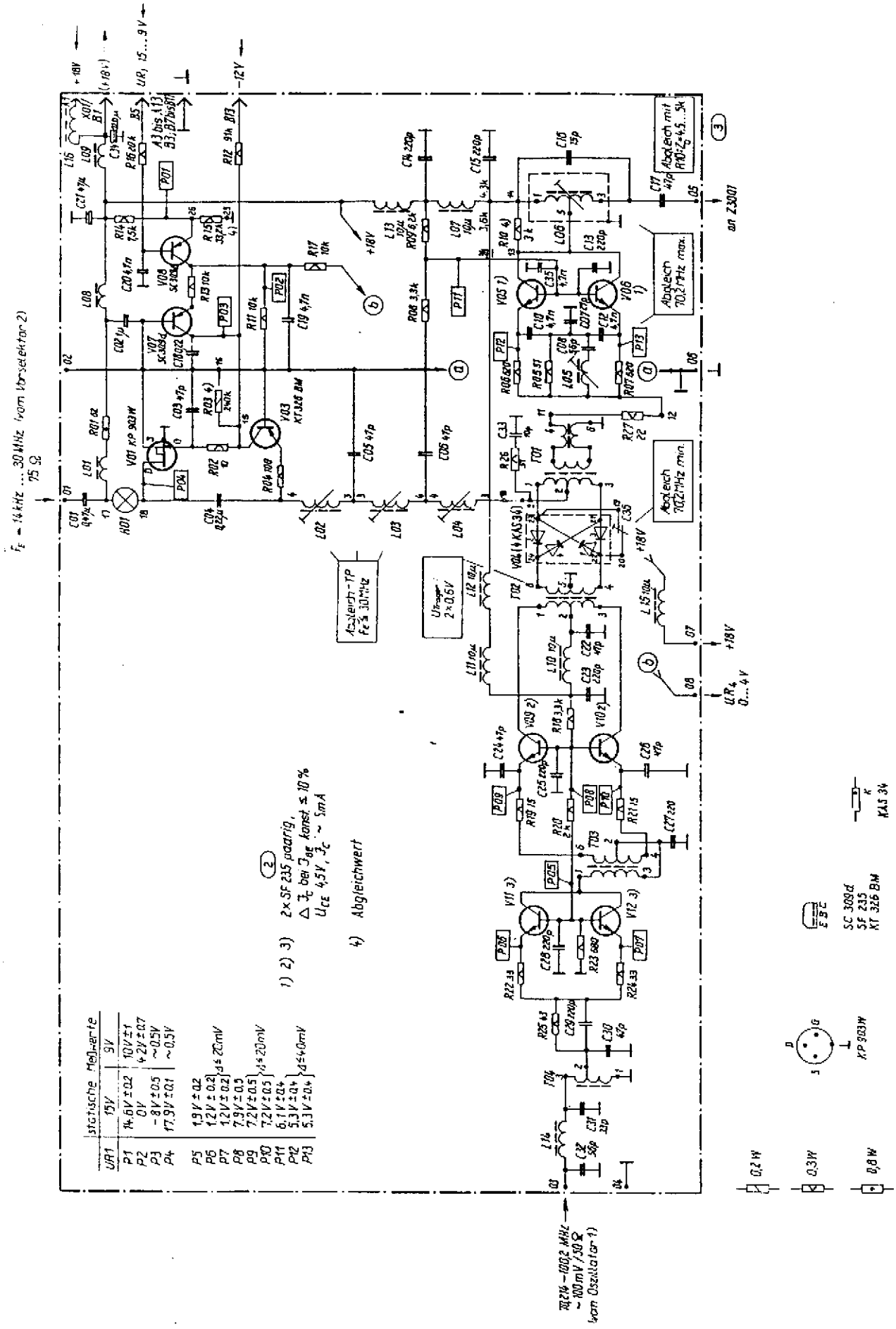

	statische Meßwerte	
UR1	15V	9V
P1	14,6V ± 0,2	10V ± 1
P2	0V	4,2V ± 0,7
P3	-8V ± 0,5	~0,5V
P4	17,9V ± 0,1	~0,5V
P5	1,9V ± 0,2	
P6	1,2V ± 0,2	d ≤ 20mV
P7	1,2V ± 0,2	
P8	7,9V ± 0,5	
P9	7,2V ± 0,5	d ≤ 20mV
P10	7,2V ± 0,5	
P11	6,1V ± 0,4	
P12	5,3V ± 0,4	d ≤ 40mV
P13	5,3V ± 0,4	

MISCHER 1
1340.041-01353 Sp

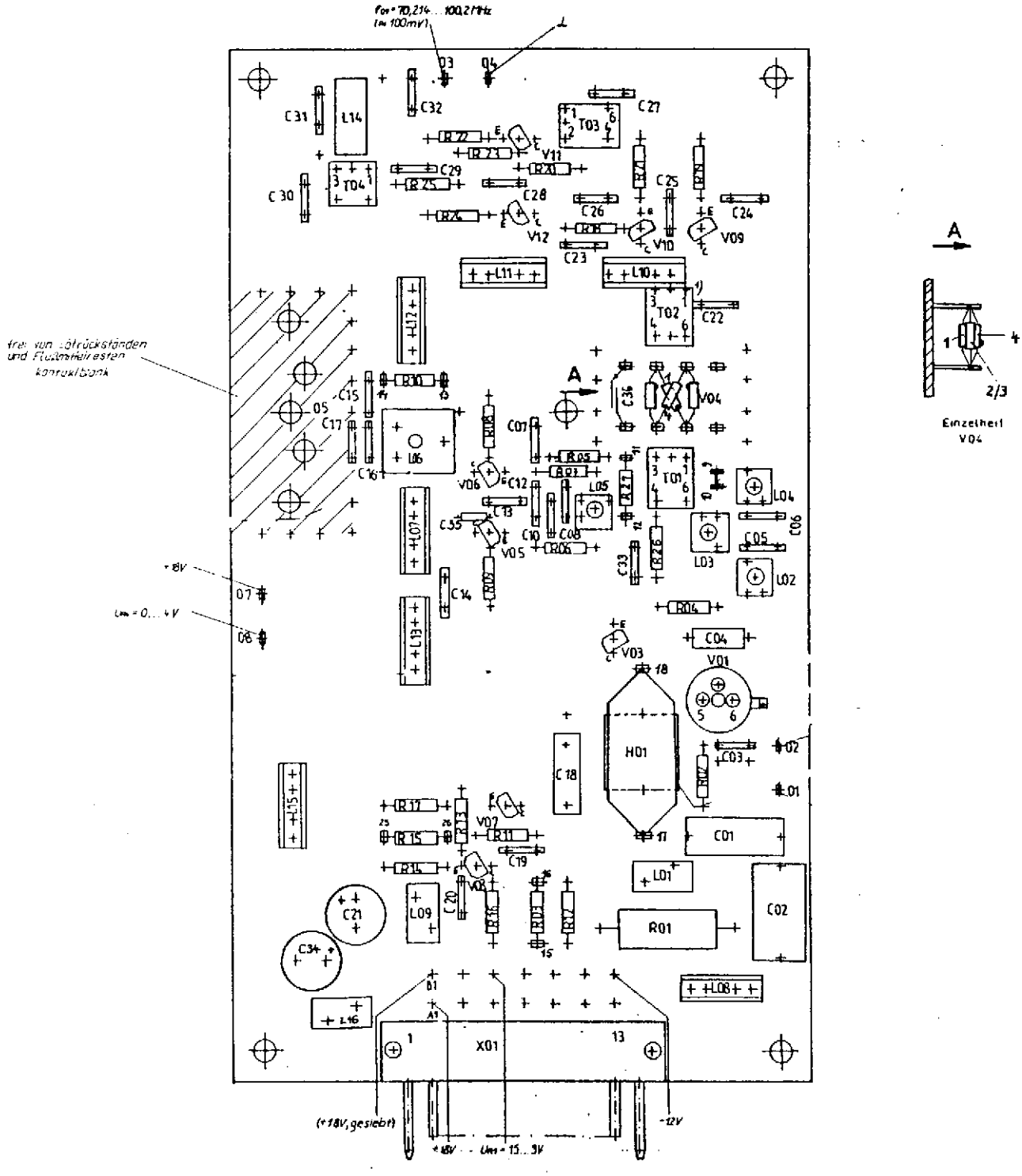

MISCHER 1
1340.041-01353

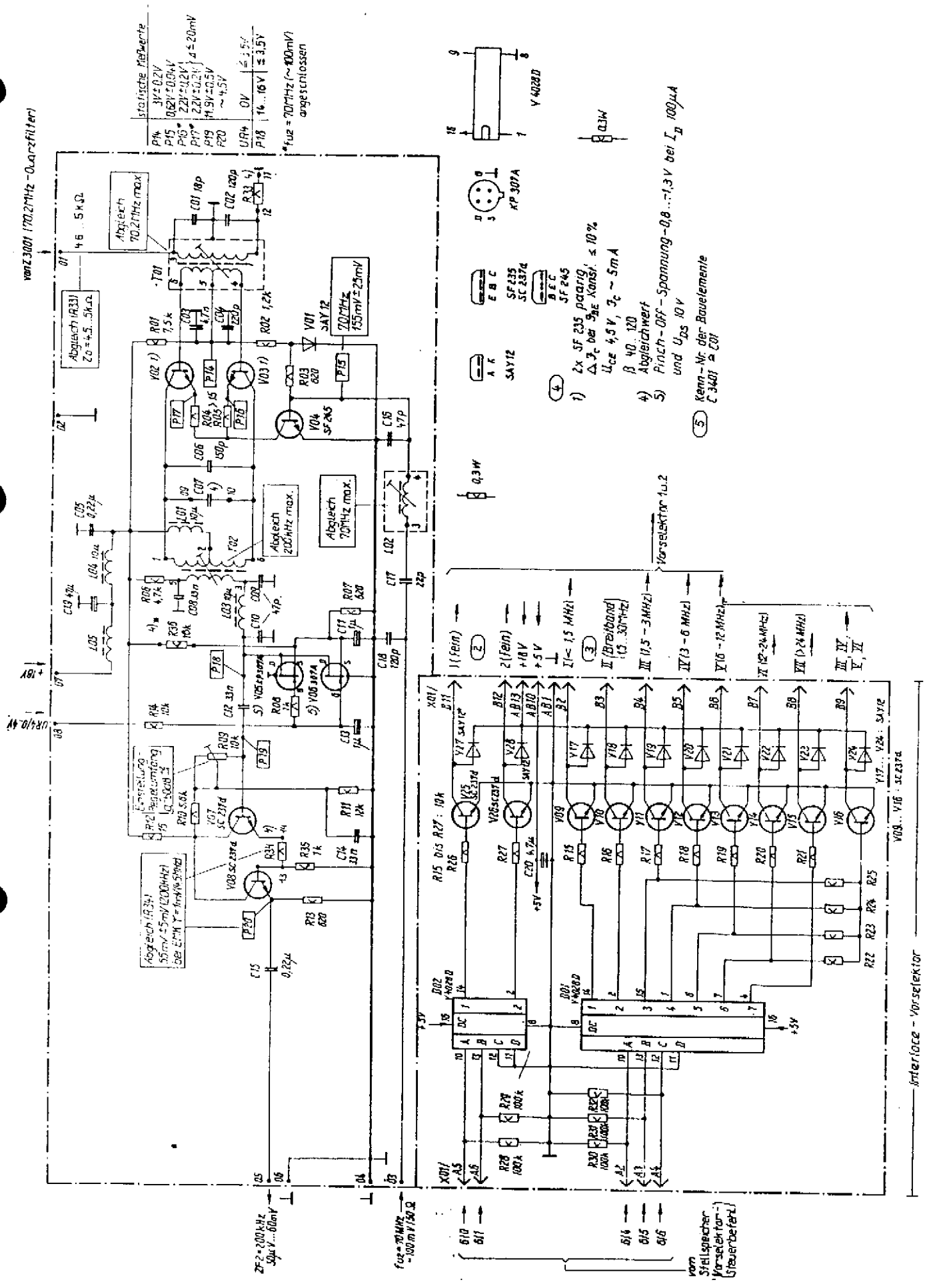

MISCHER 2
1340.041-01354 Sp

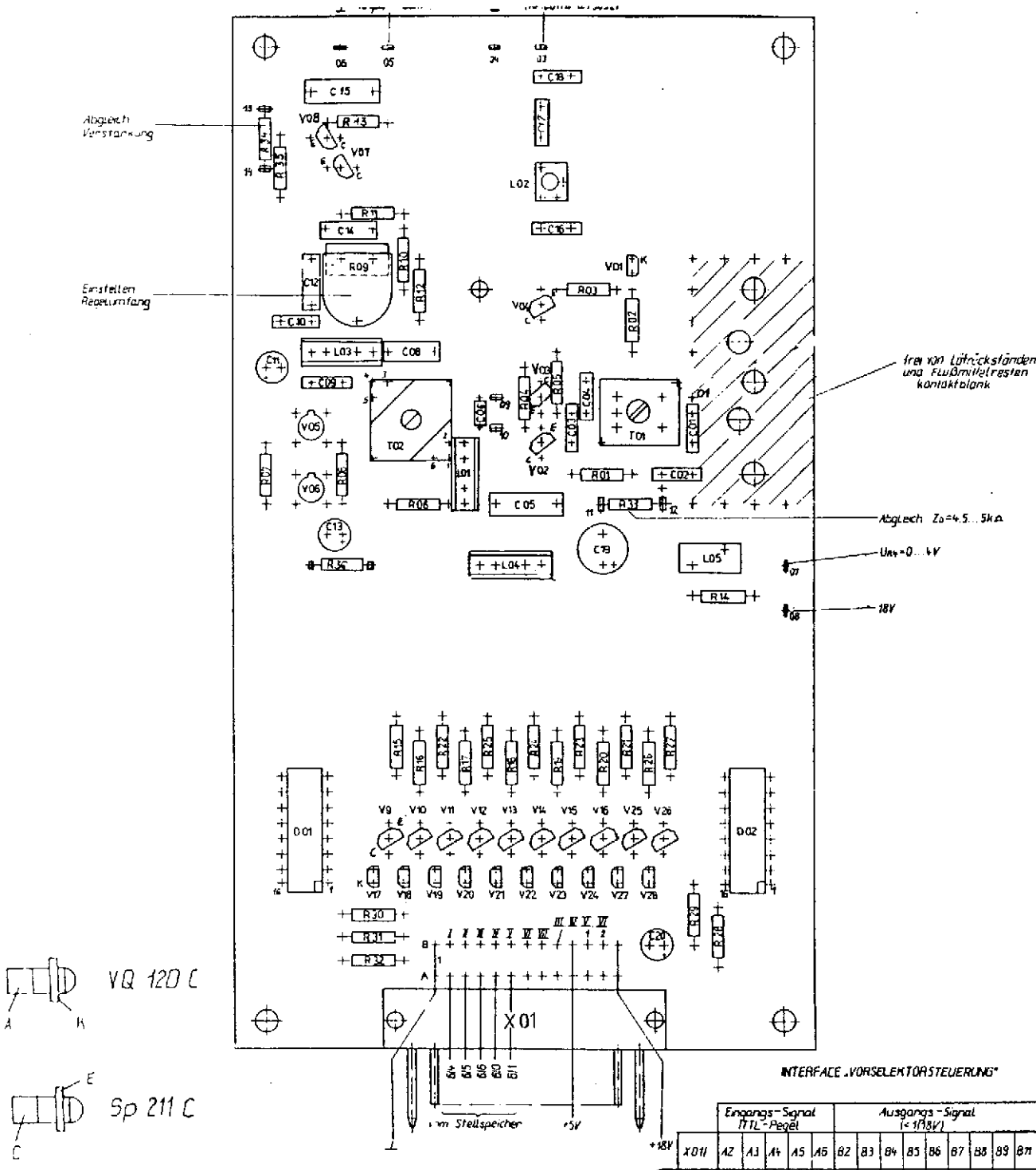

INTERFACE „VORSELEKTORSTEUERUNG"

		Eingangs-Signal (TTL-Pegel)					Ausgangs-Signal (< 1/18V)										
	X01/I	A2	A3	A4	A5	A6	B2	B3	B4	B5	B6	B7	B8	B9	B11	B12	Bereich (MHz)
grob	I	0	0	1	–	–	<1	18	18	18	18	18	18	18	–	–	<1,5
	II	0	1	0	–	–	18	<1	18	18	18	18	18	18	–	–	1,5 ... <30
	III	0	1	1	–	–	18	18	<1	18	18	18	18	<1	–	–	1,5 ... <3
	IV	1	0	0	–	–	18	18	18	<1	18	18	18	<1	–	–	3 ... <6
	V	1	0	1	–	–	18	18	18	18	<1	18	18	<1	–	–	6 ... <12
	VI	1	1	0	–	–	18	18	18	18	18	<1	18	<1	–	–	12 ... <24
	VII	1	1	1	–	–	18	18	18	18	18	18	<1	18	–	–	≥24
fein	1	–	–	–	1	0	–	–	–	–	–	–	–	–	<1	18	IV 1 1,5 <; IV 1 3 ... <; V 1 6 <; VI 1 12 <
	2	–	–	–	0	1	–	–	–	–	–	–	–	–	18	<1	IV 2 2 <; IV 2 4 <; V 2 8 <; VI 2 16 <
	3	–	–	–	1	1	–	–	–	–	–	–	–	–	18	18	IV 3 2,5 <; IV 3 5 ... <; V 3 10 <; VI 3 20 <

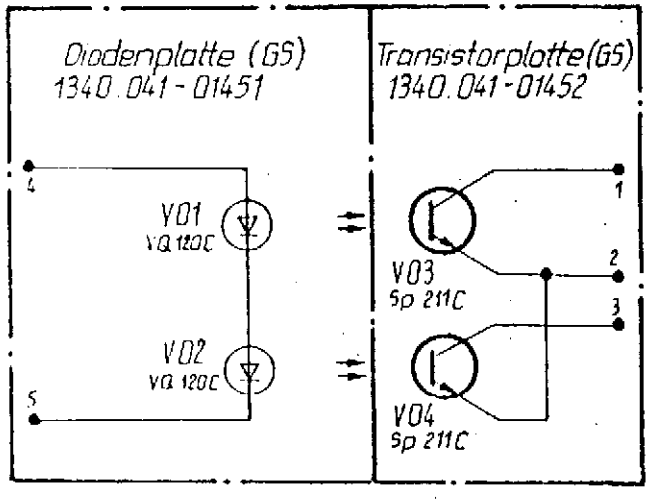

DREHIMPULSGEBER
1340.041-01431 Sp

MISCHER 2
1340.041-01354

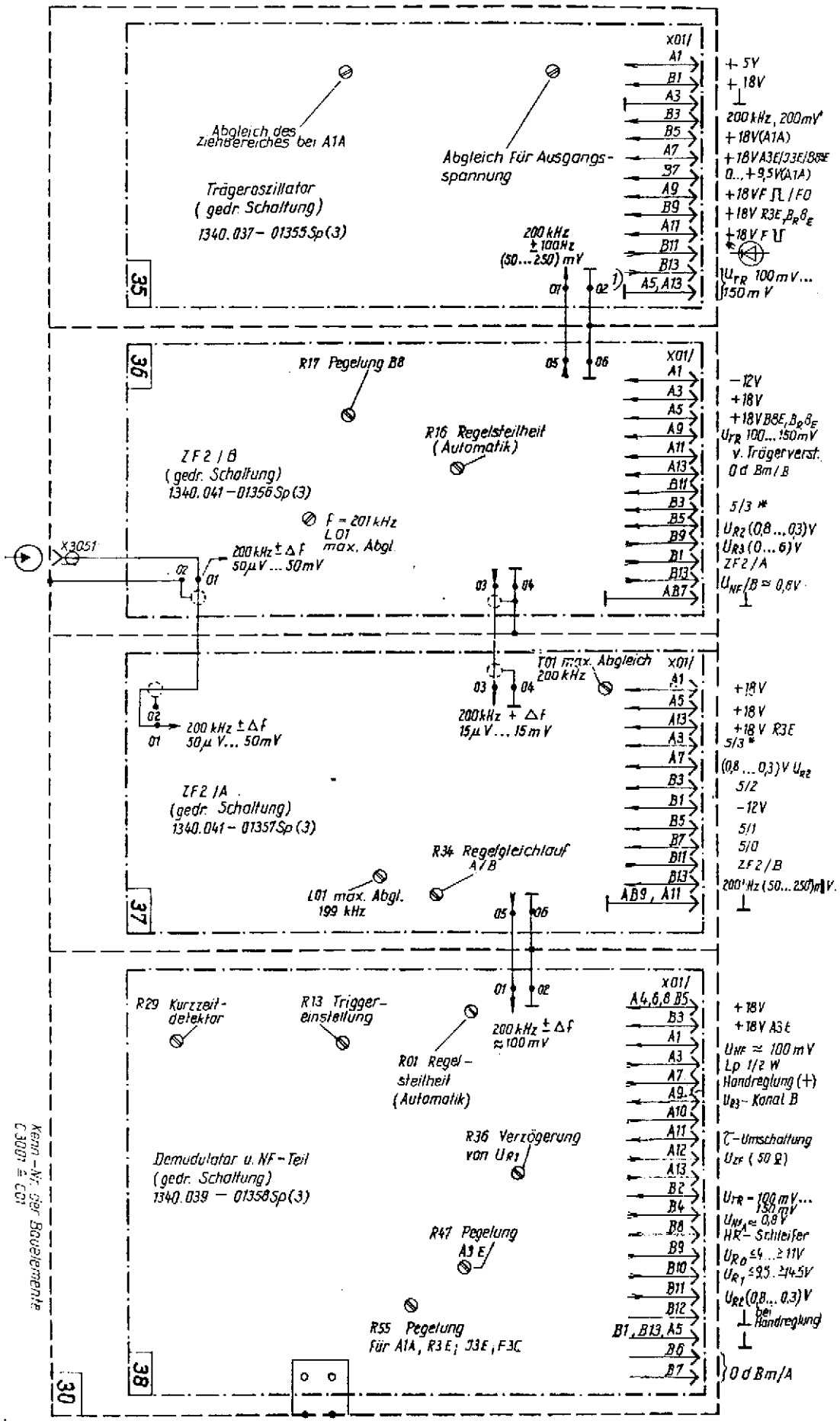

SIGNALWEG 2
1340.041-01321 Sp

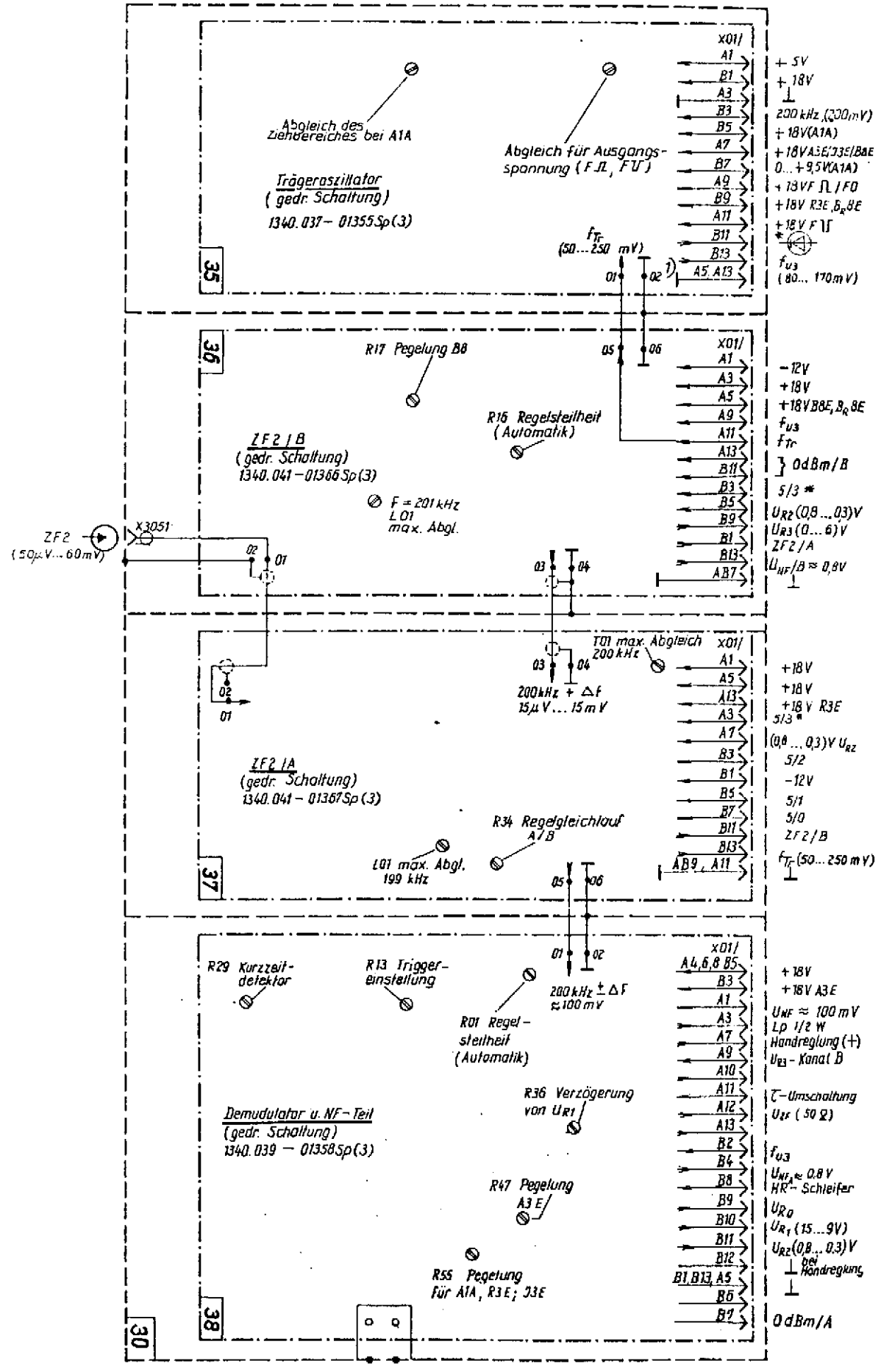

SIGNALWEG 2
1340.041-01322 Sp

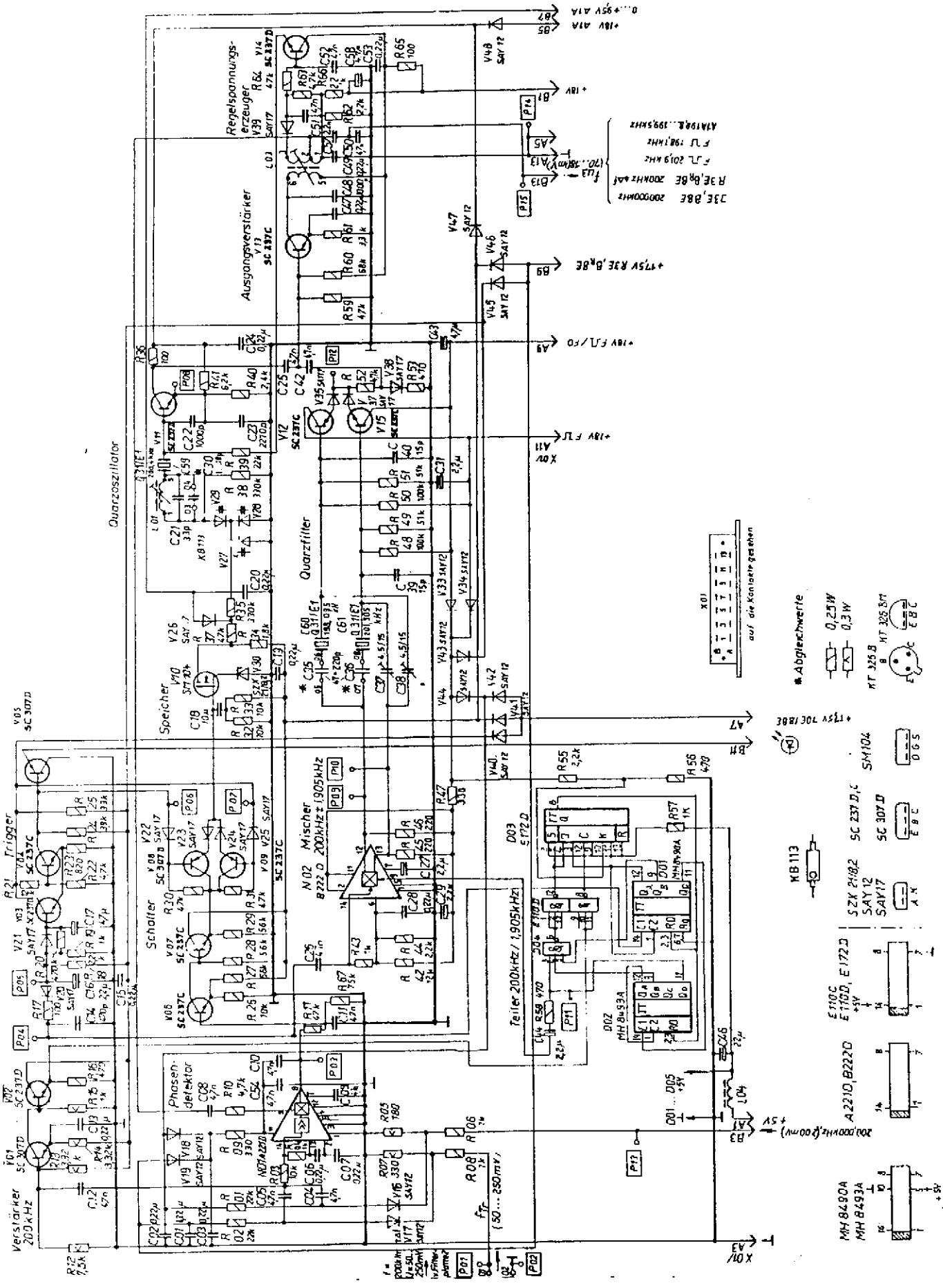

TRÄGEROSZILLATOR
1340.037-01355 Sp

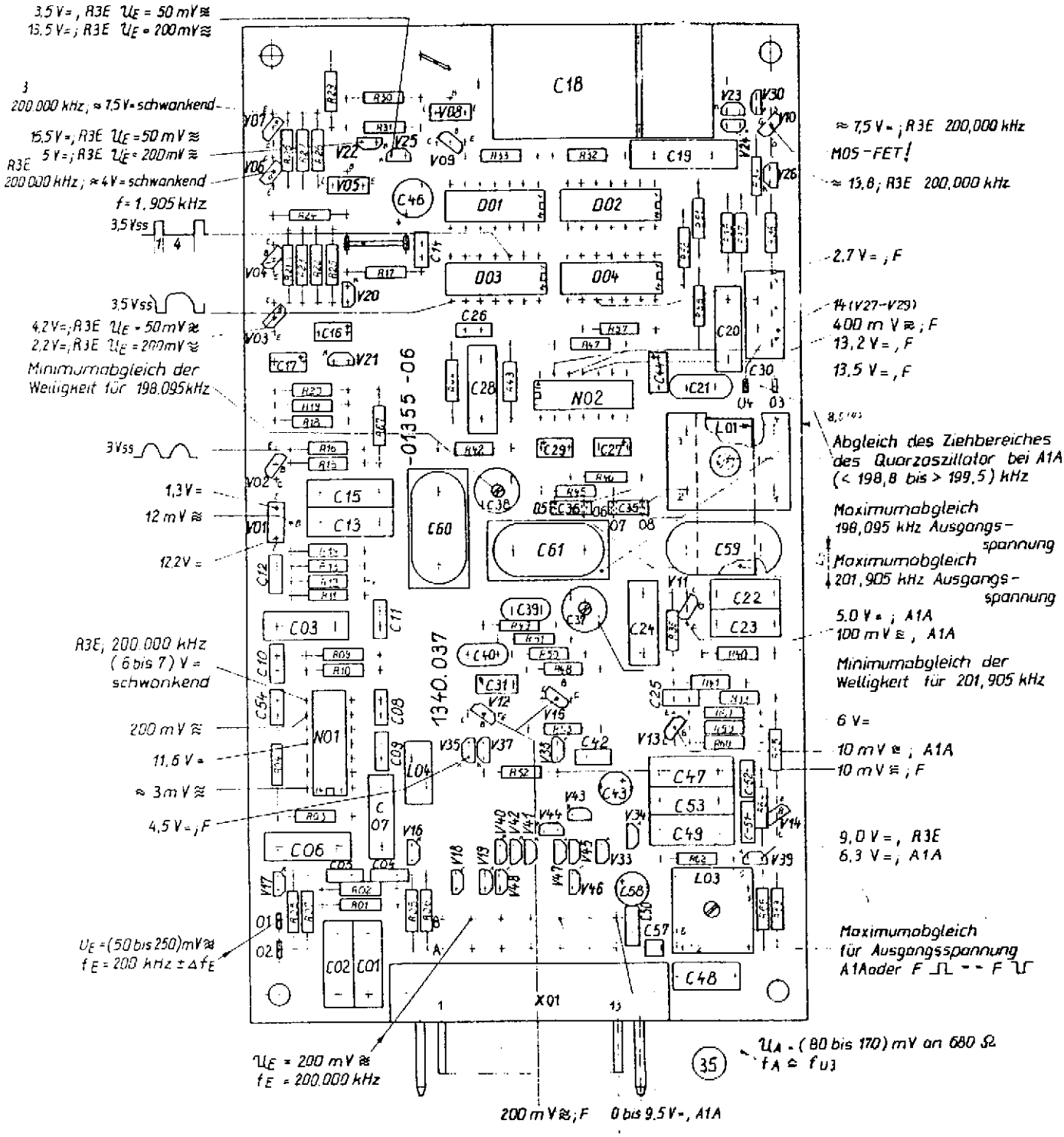

TRÄGEROSZILLATOR
1340.037-01355

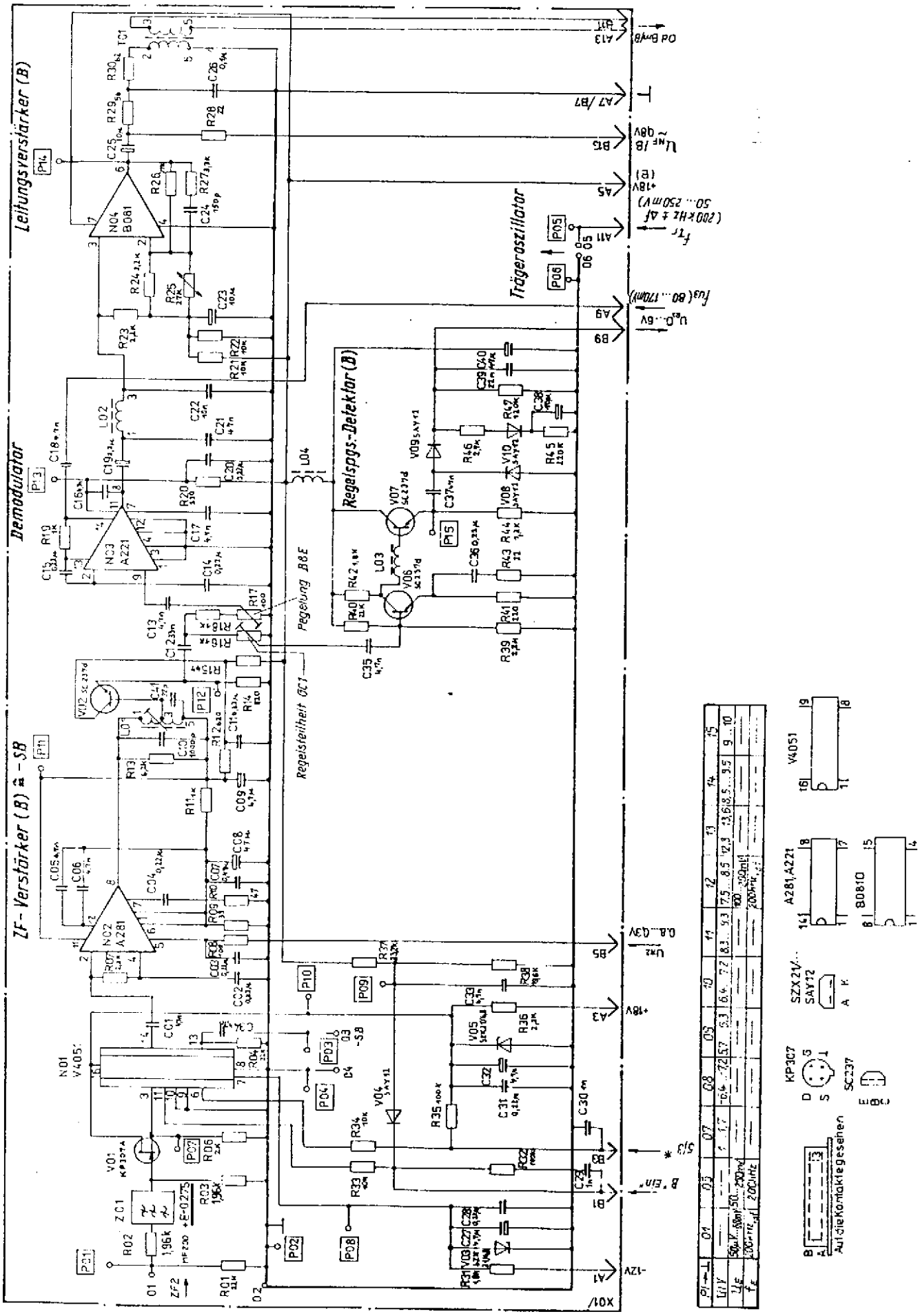

ZF 2 / B
1340.041-01356 Sp

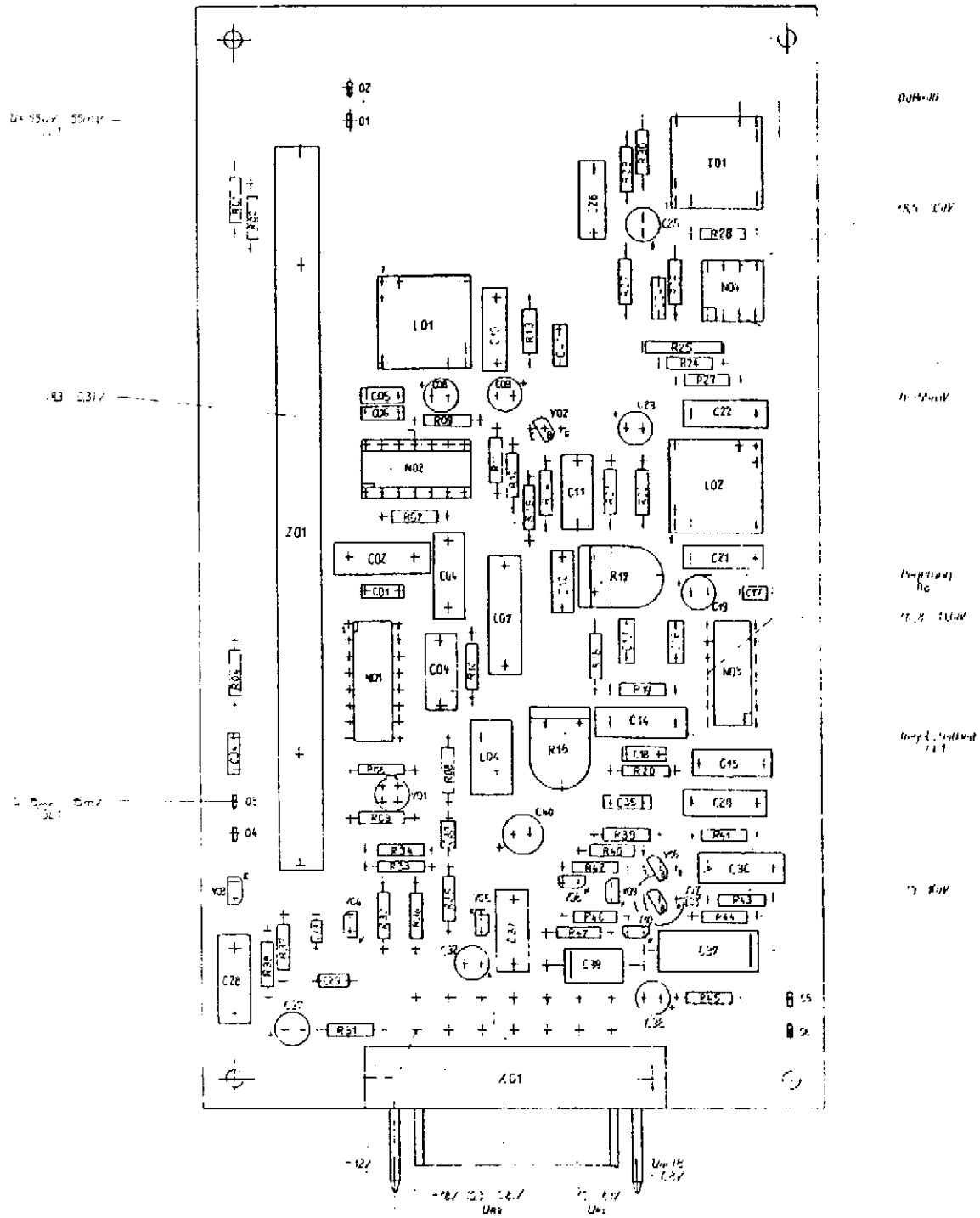

ZF 2 / B
1340.041-01356 / 01366

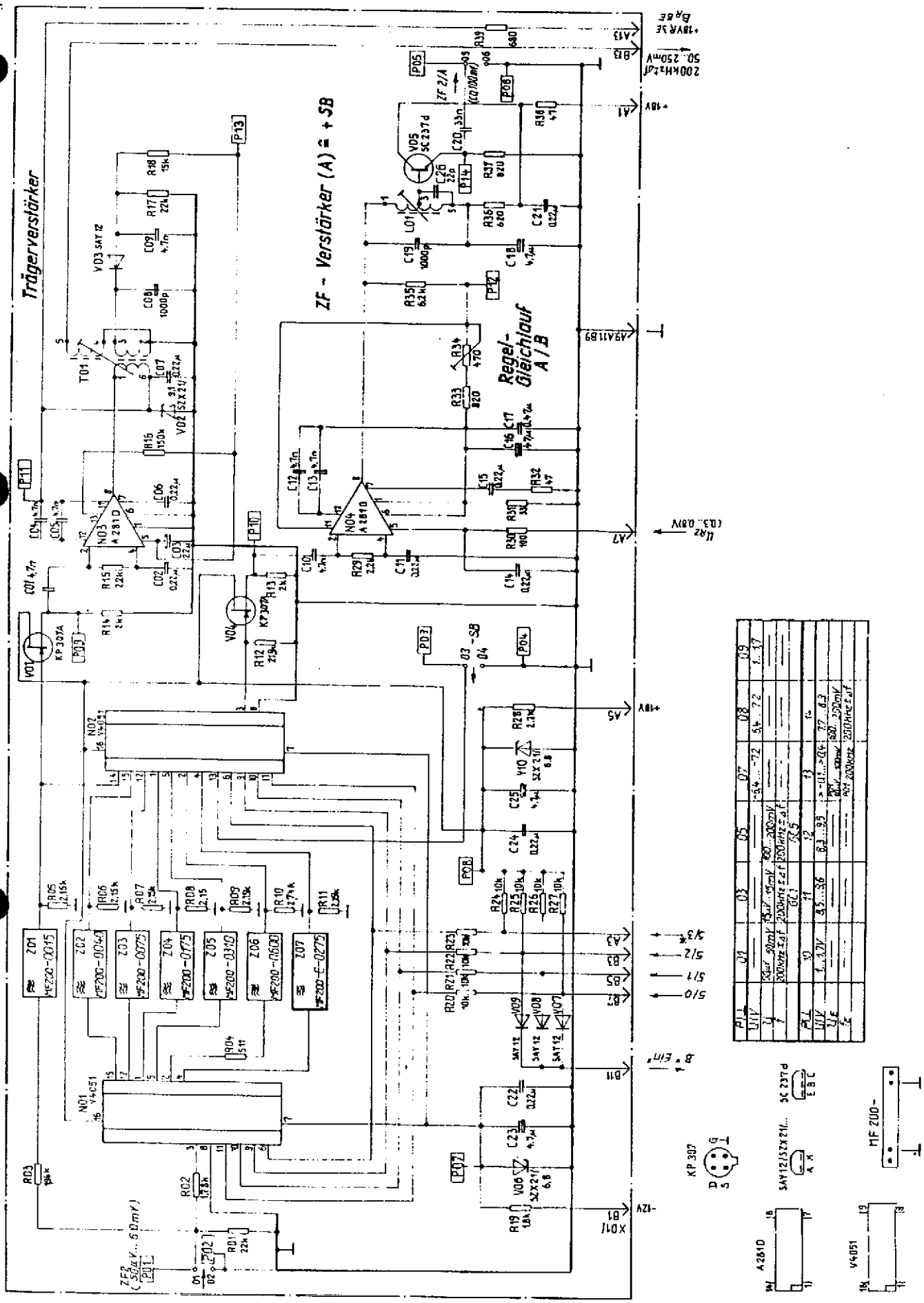

ZF 2 / A
1340.041-01357 Sp

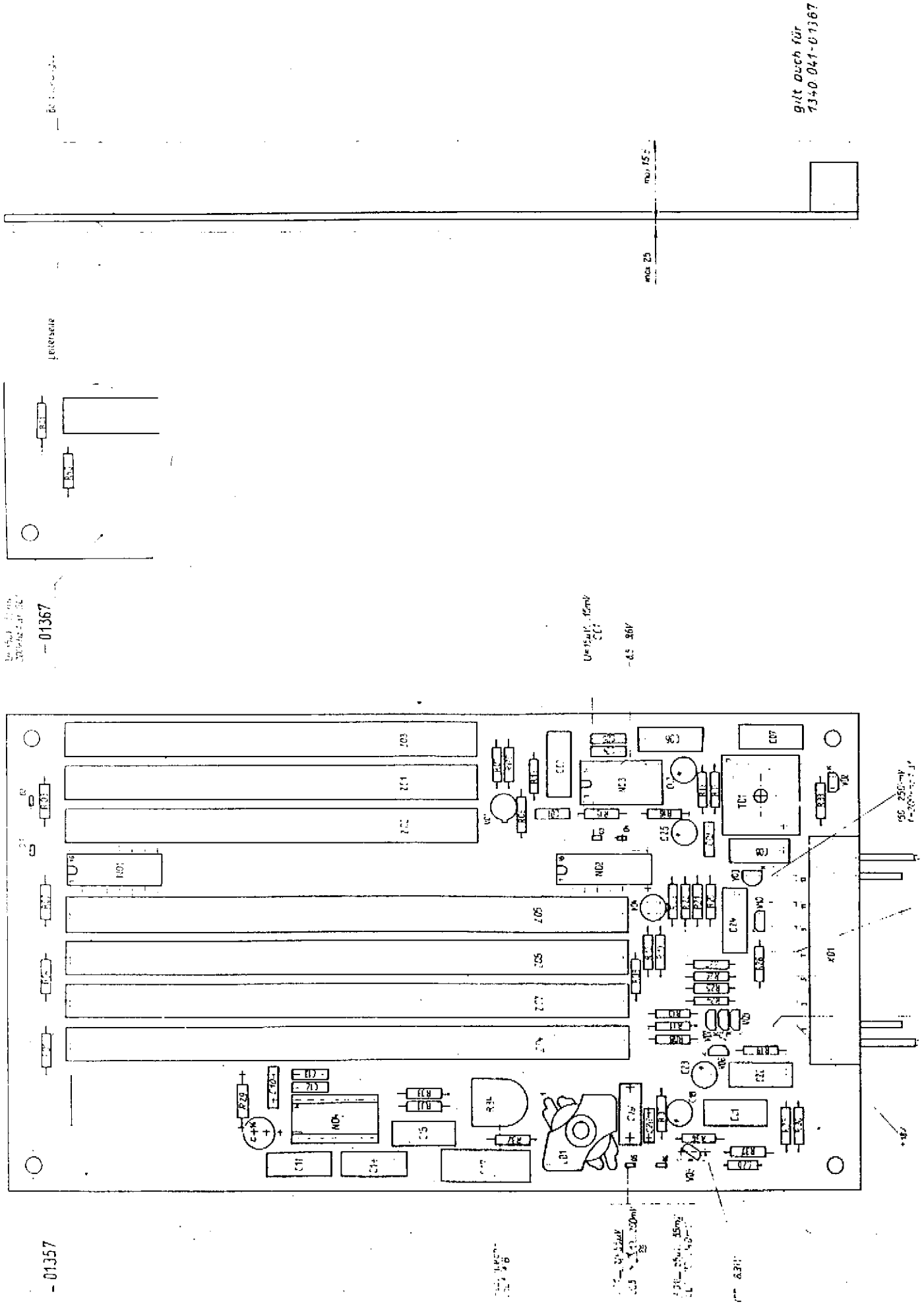

ZF 2 / A
1340.041-01357 / 01367

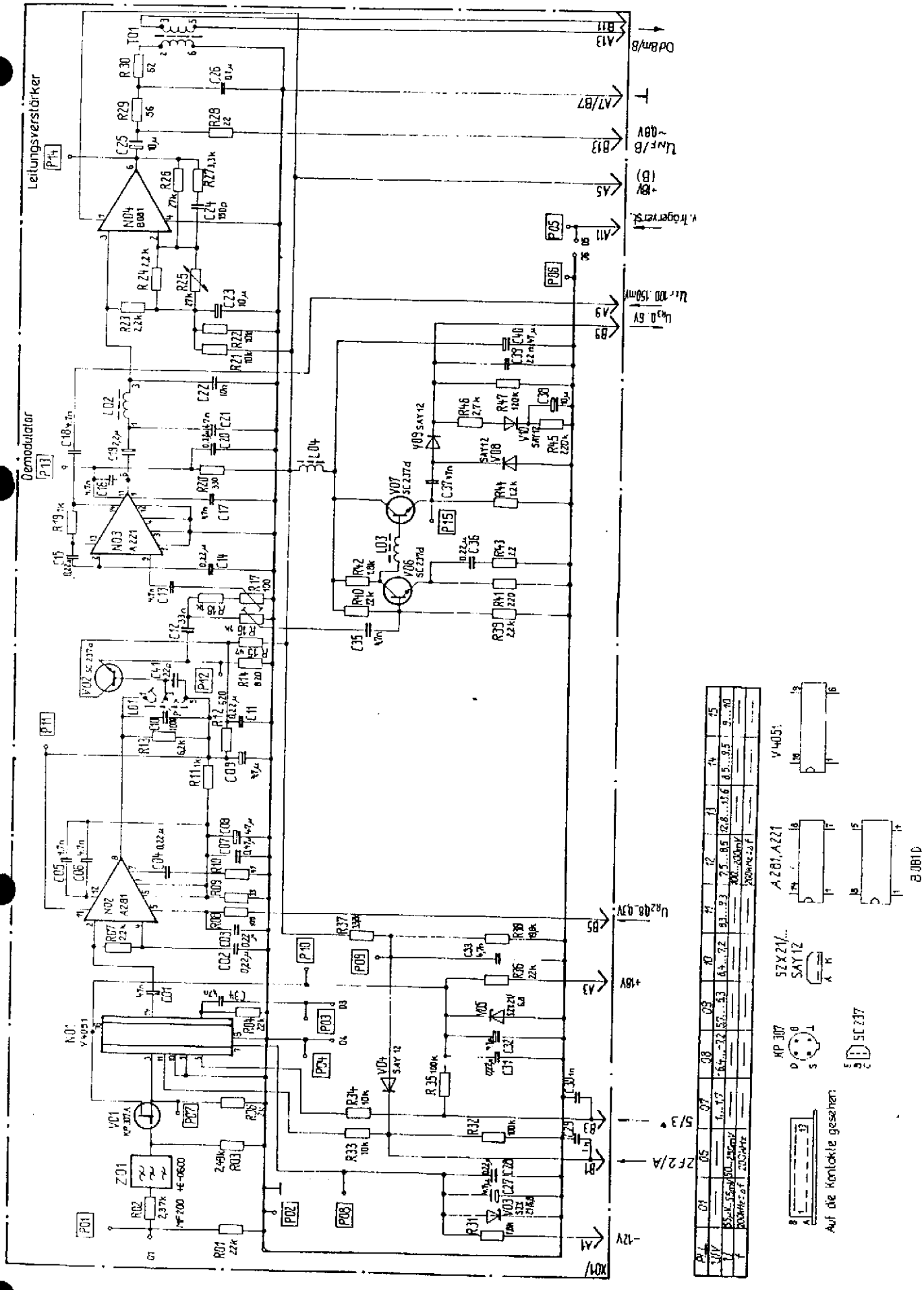

ZF 2 / B
1340.041-01366 Sp

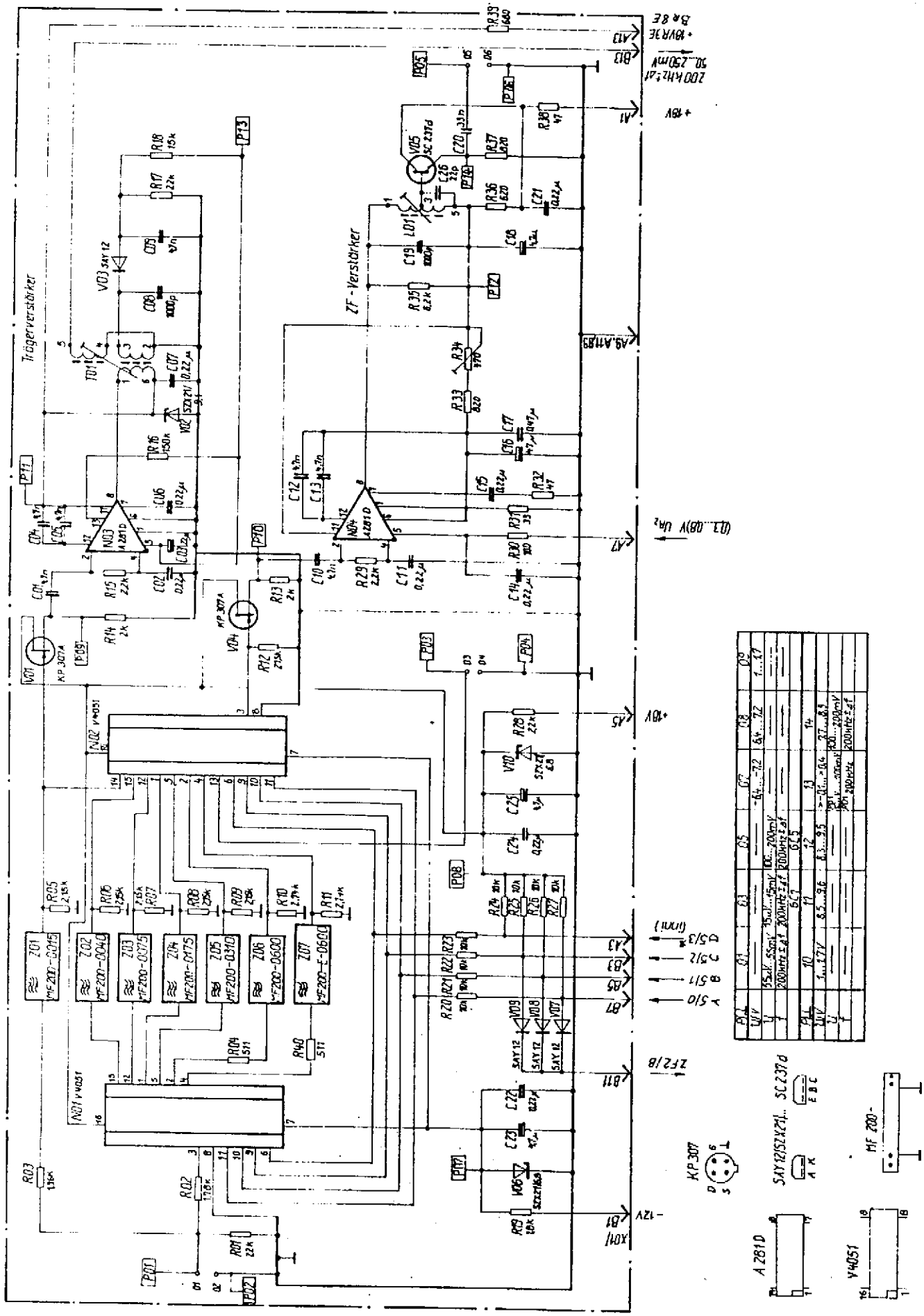

ZF 2 / A
1340.041-01367 Sp

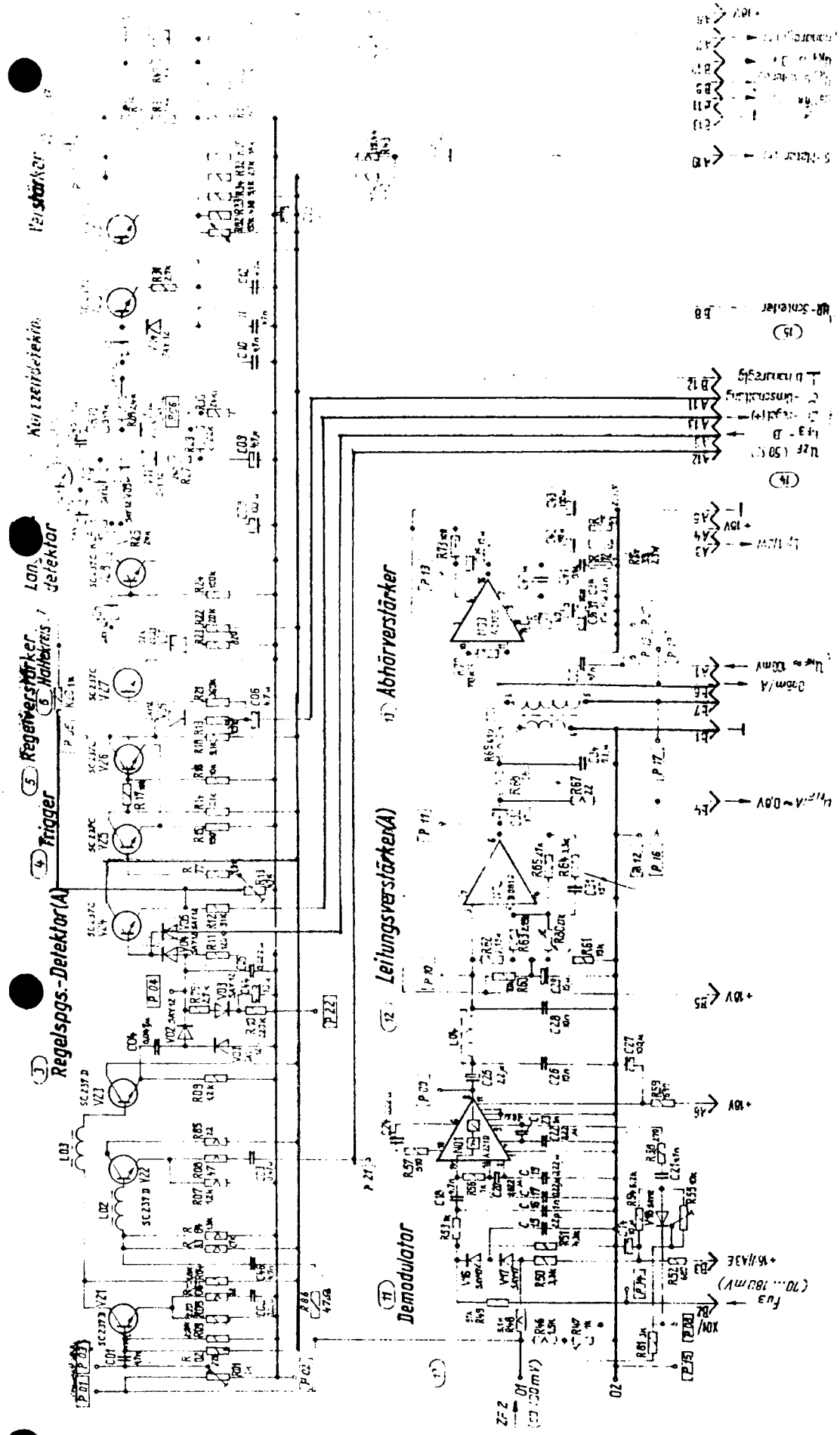

DEMODULATOR und NF-TEIL
1340.039-01358 Sp

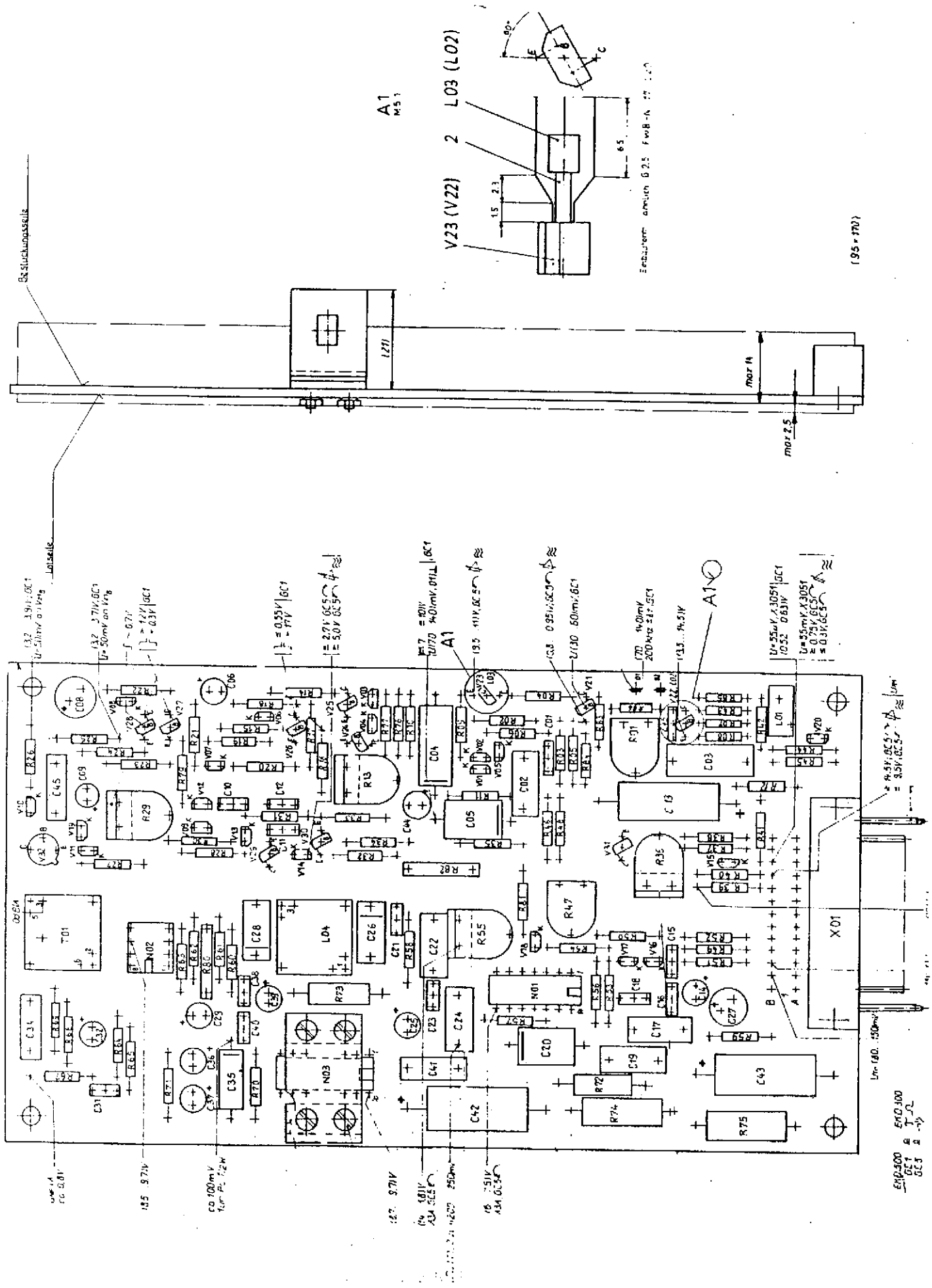

DEMODULATOR und NF-TEIL
1340.039-01358

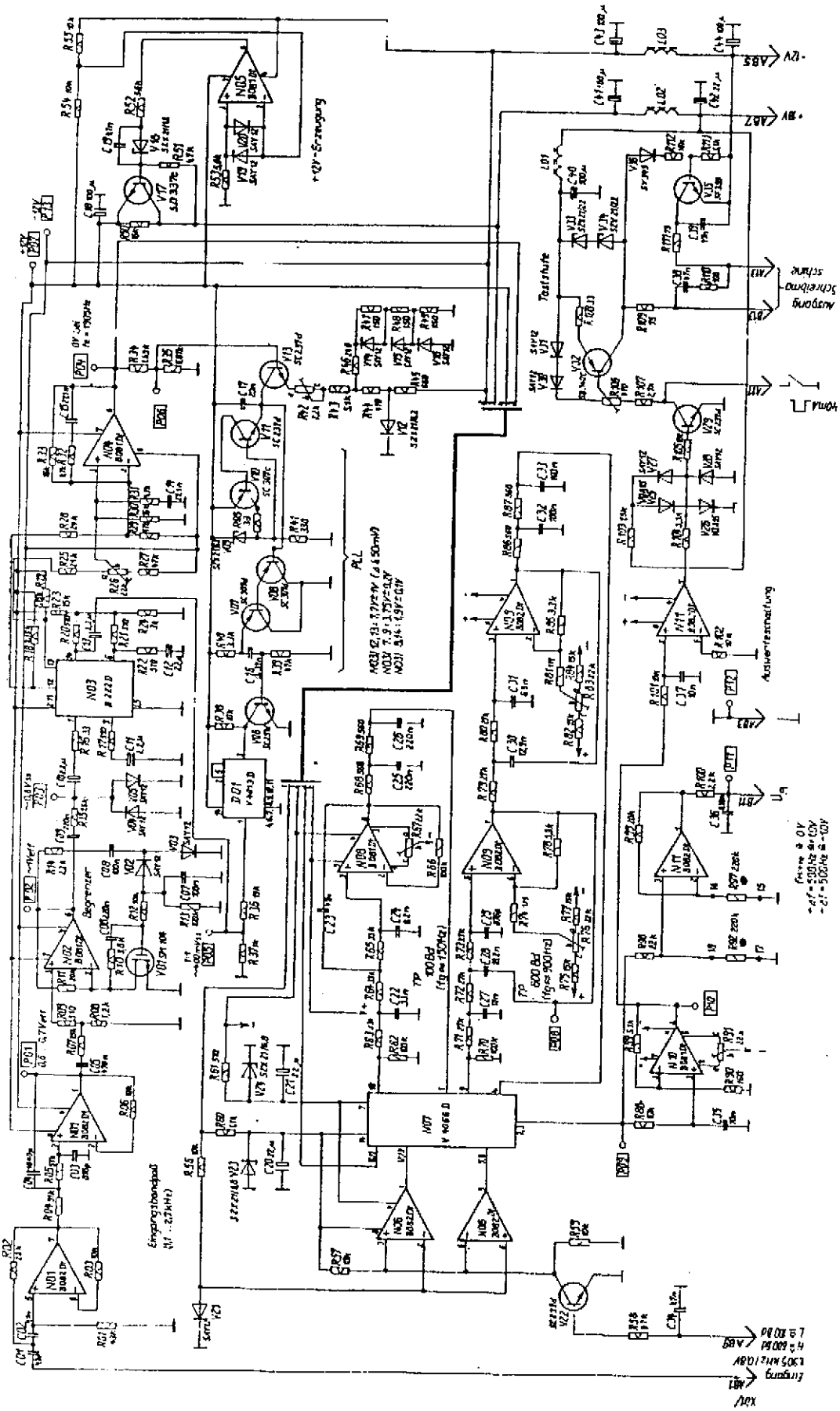

F1-DEMODULATOR
1340.041-01258 Sp

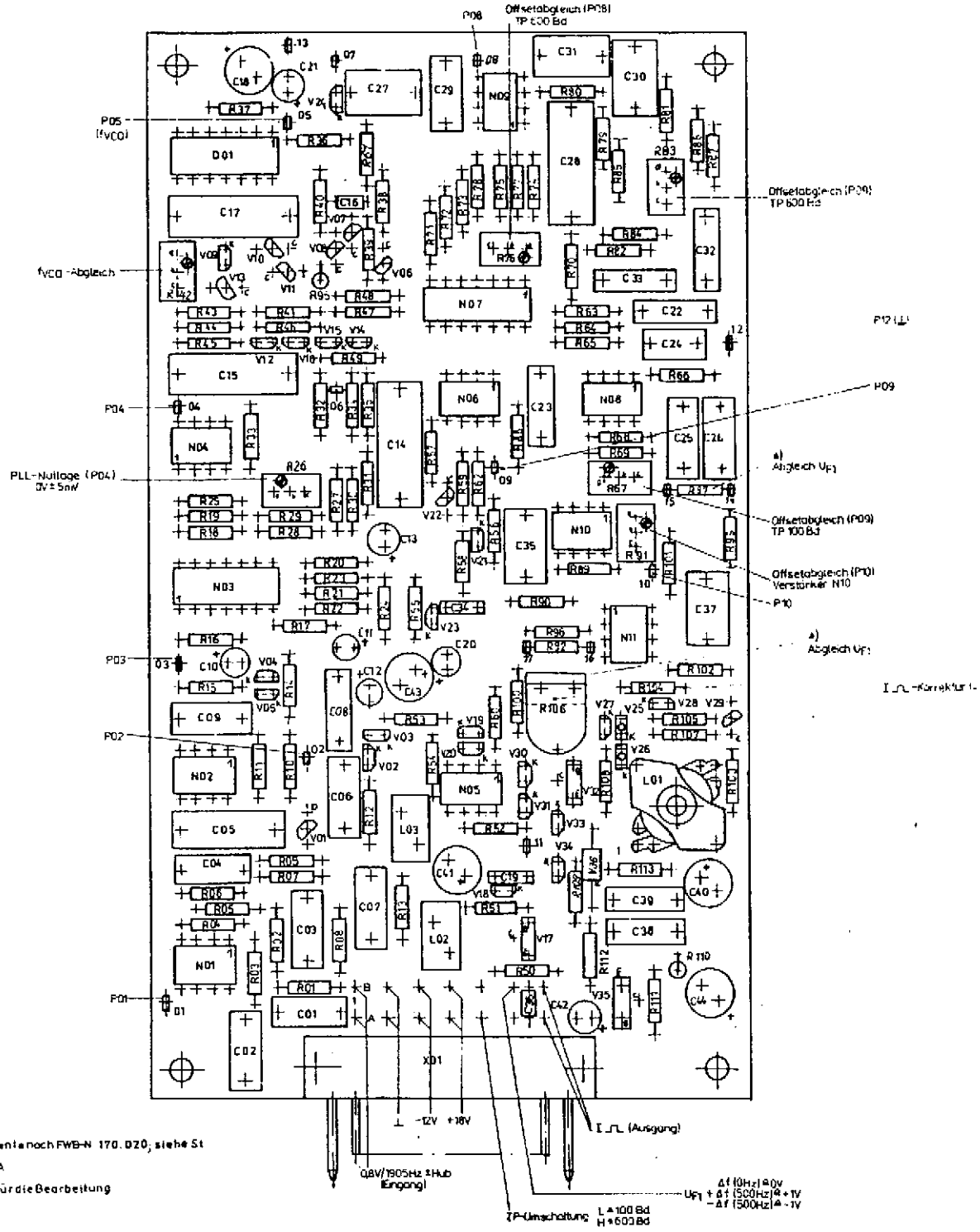

F1-DEMODULATOR
1340.041-01258

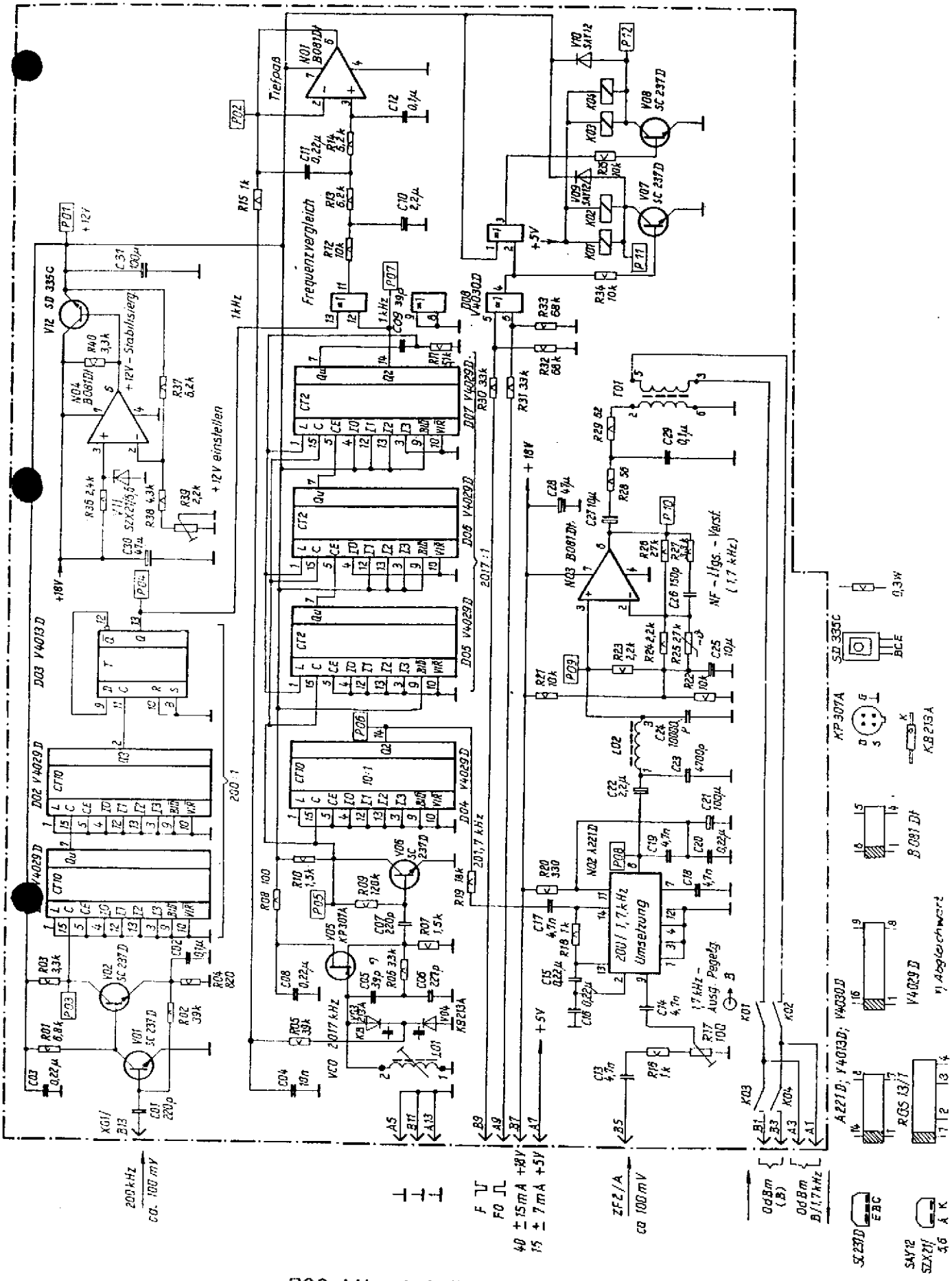

200 kHz / 1.7 kHz - UMSETZER
1340.041-01257 Sp

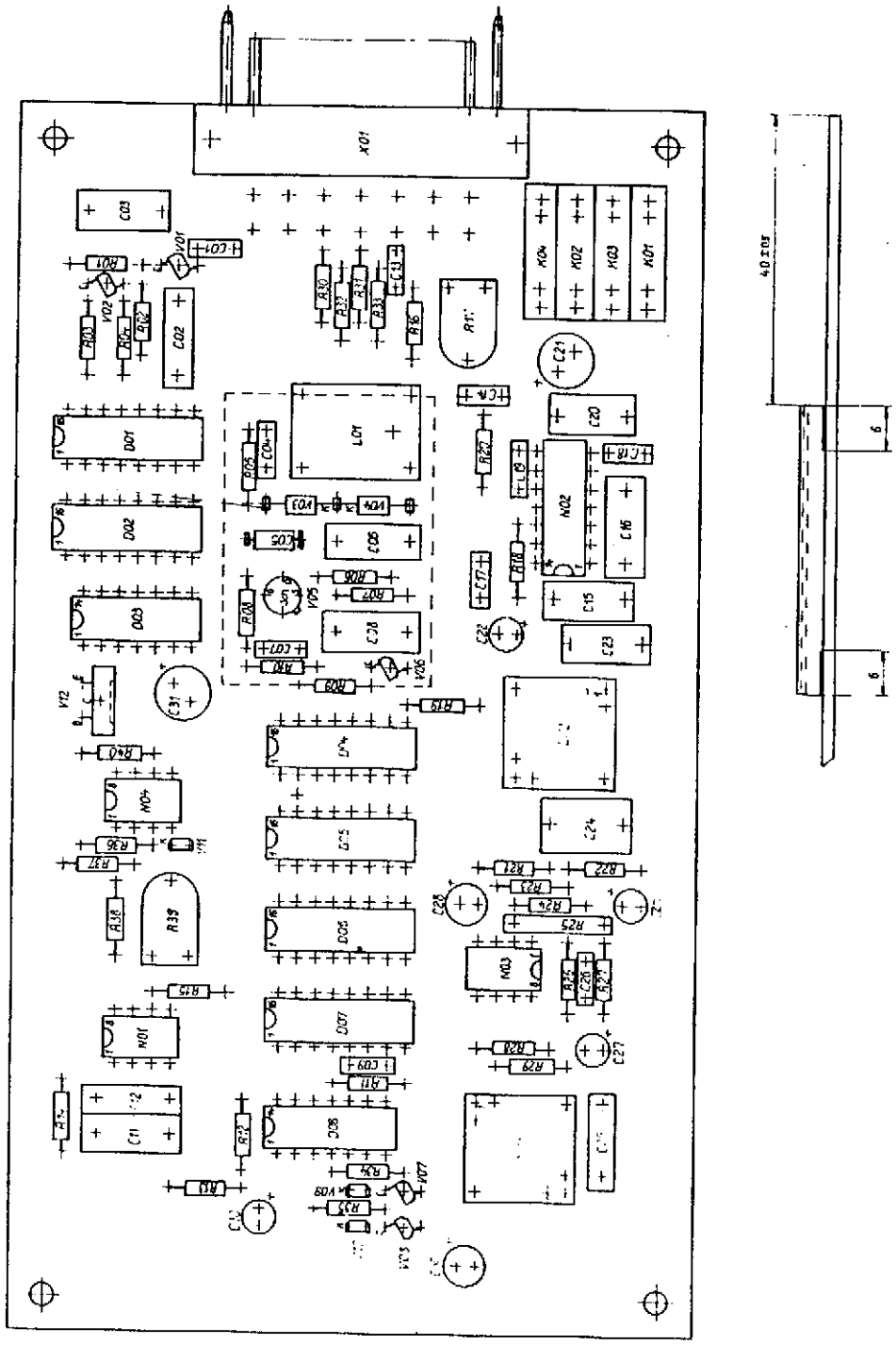

200 kHz / 1.7 kHz - UMSETZER
1340.041-01257